Leuze electronic

the sensor people

External lighting connection diagram
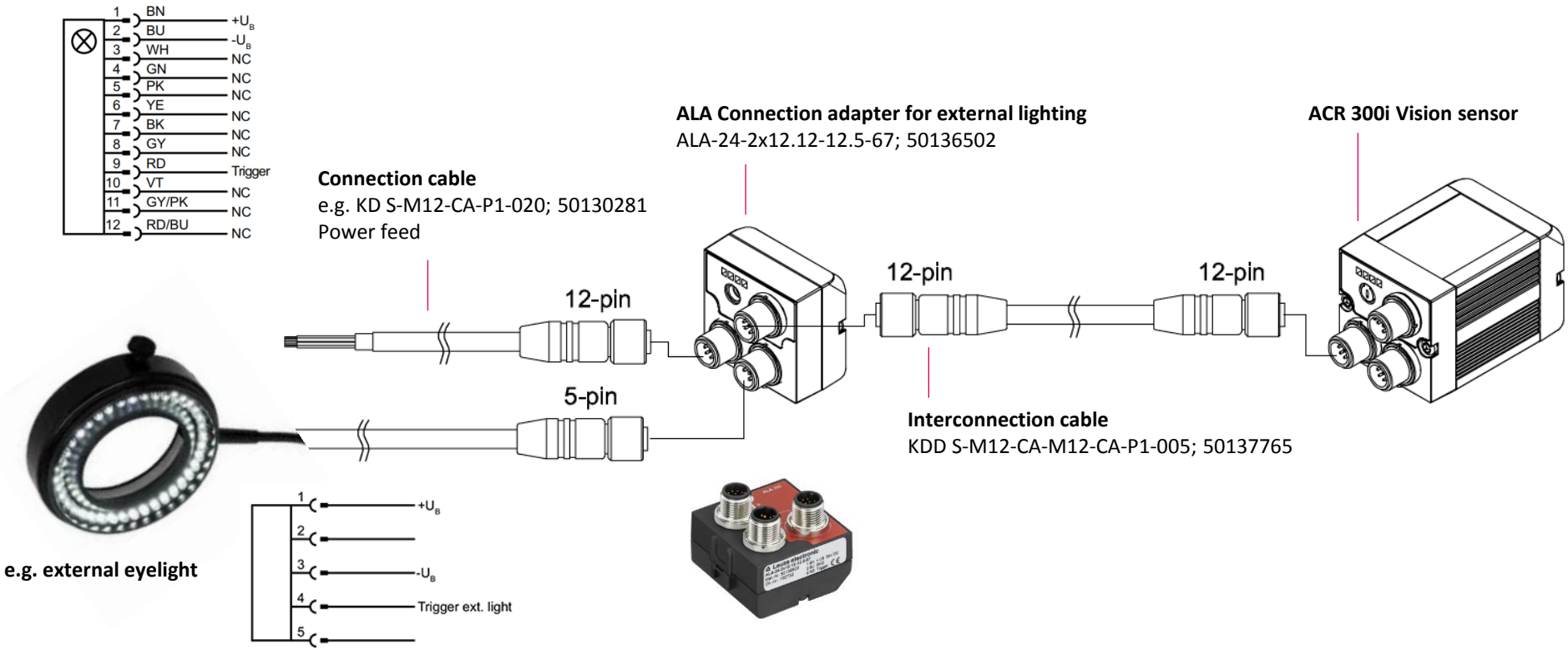
Other external light connected by ALA module