Technical data sheet

Distance diffuse sensor with background suppression

Part no.: 50157464

ODT5BL1-1500.3/LX-200-M12



For Illustration purposes only

Contents

- Technical data
- Dimensioned drawings
- Electrical connection
- Diagrams
- Operation and display
- Part number code
- Notes
- Further information
- Accessories

Technical data

Basic data

Series	5B
Operating principle	Distance diffuse sensor with background suppression
Type of scanning system	Against object

Special version

Special version	2 independent switching outputs
	Measurement value output

Optical data

Black-white error	±20 mm
Operating range	0.05 ... 1.5 m (guaranteed operating range)
Adjustment range	20 ... 2,000 mm
Beam path	Focused
Light source	Laser, Red
Wavelength	680 nm
Laser class	1, IEC 60825-1:2014 / EN 60825-1:2014+A11:2021
Transmitted-signal shape	Pulsed
Type of light spot geometry	Multi-Dot
Shift angle	Typ. ± 1.5°

Measurement data

Measurement range	0 ... 2,000 mm
Resolution	1.0 mm
Accuracy	-10 ... 40 mm
Reproducibility (1 sigma)	0 ... 12 mm
Measurement value output	via IO-Link
Optical distance measurement principle	Time of flight

Electrical data

Protective circuit	Polarity reversal protection
	Short circuit protected
	Transient protection

Performance data

Supply voltage U_B	10 ... 30 V, DC, Incl. residual ripple
Residual ripple	0 ... 15 %, From U_B

Outputs

Number of digital switching outputs	1 Piece(s)

Switching outputs

Type	Digital switching output
Voltage type	DC
Switching current, max.	100 mA
Switching voltage	high: ≥(U_B-2V)
	low: ≤ 2 V

Switching output 1

Assignment	Connection 1, pin 4
Switching element	Transistor, Push-pull
Switching principle	IO-Link / light switching (PNP)/dark switching (NPN)

Time behavior

Switching frequency	50 Hz
Response time	10 ms
Readiness delay	300 ms

Interface

Type	IO-Link

IO-Link

COM mode	COM3
Profile	Smart sensor profile
Min. cycle time	COM3 = 0.6 ms
Frame type	2.V
Specification	V1.1
Device ID	2251
SIO-mode support	Yes

Connection

Number of connections	1 Piece(s)

Connection 1

Function	Signal IN
	Signal OUT
	Voltage supply
Type of connection	Cable with connector
Cable length	200 mm
Sheathing material	PUR
Cable color	Black
Number of conductors	4 -wire
Wire cross section	0.2 mm²
Thread size	M12
Type	Male
Material	Plastic
No. of pins	4 -pin
Encoding	A-coded

Mechanical data

Dimension (W x H x L)	11 mm x 32.4 mm x 20 mm
Housing material	Plastic
Plastic housing	PC-ABS
Lens cover material	Plastic
Net weight	18 g
Housing color	Red
Type of fastening	Through-hole mounting
	Via optional mounting device
Recommended tightening torque for M3 fastening	0.9 N·m
Compatibility of materials	ECOLAB

Operation and display

Type of display	LED
Number of LEDs	2 Piece(s)
Operational controls	Teach button
Function of the operational control	Light/dark switching
	Range adjustment

Environmental data

Ambient temperature, operation	-30 ... 55 °C
Ambient temperature, storage	-30 ... 70 °C

Technical data

Certifications

Degree of protection	IP 67
Protection class	III
Approvals	c UL US
Standards applied	IEC 60947-5-2

Classification

Customs tariff number	85365019
ECLASS 5.1.4	27270904
ECLASS 8.0	27270904
ECLASS 9.0	27270904
ECLASS 10.0	27270904
ECLASS 11.0	27270904
ECLASS 12.0	27270903
ECLASS 13.0	27270903
ECLASS 14.0	27270903
ECLASS 15.0	27270903
ECLASS 16.0	27270903
ETIM 5.0	EC002719
ETIM 6.0	EC002719
ETIM 7.0	EC002719
ETIM 8.0	EC002719
ETIM 9.0	EC002719
ETIM 10.0	EC002719
UNSPSC 26.08	39121528

Dimensioned drawings

All dimensions in millimeters

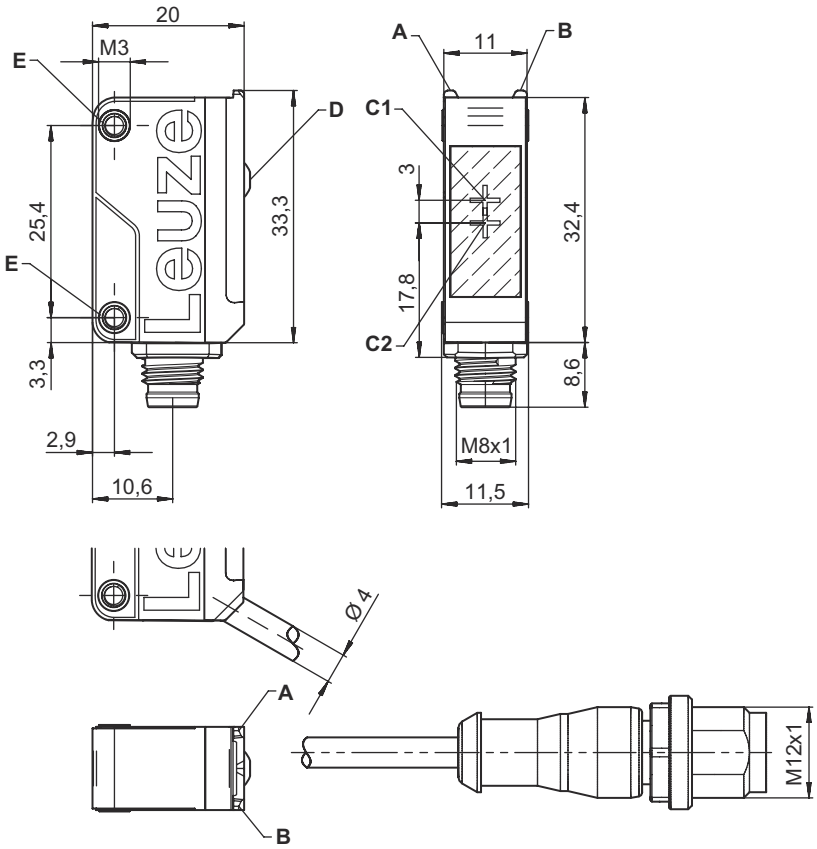

A Green LED
B Yellow LED
C1 Receiver
C2 Transmitter
D Teach button
E Mounting sleeve

Electrical connection

Connection 1

Function	Signal IN
	Signal OUT
	Voltage supply
Type of connection	Cable with connector
Cable length	200 mm
Sheathing material	PUR
Cable color	Black
Number of conductors	4 -wire
Wire cross section	0.2 mm²
Thread size	M12
Type	Male
Material	Plastic
No. of pins	4 -pin
Encoding	A-coded

Pin	Pin assignment
1	V+
2	n.c.
3	GND
4	IO-Link / OUT 1

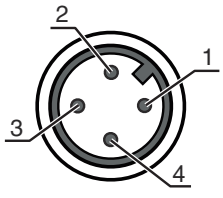

Diagrams

Typ. response behavior (white 90 %)

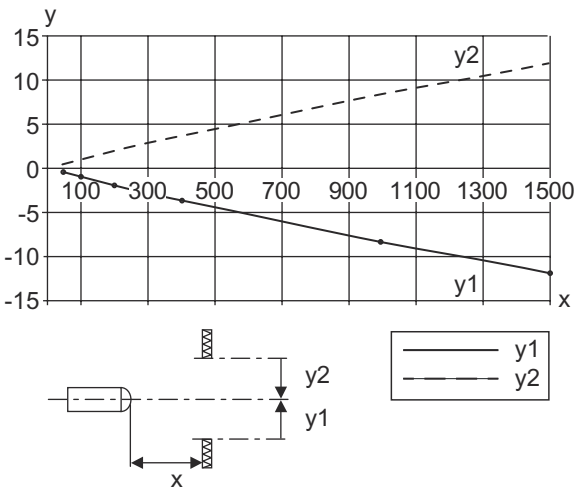

x Distance [mm]
y Misalignment [mm]

Typical reproducibility (1 Sigma / 25°C)

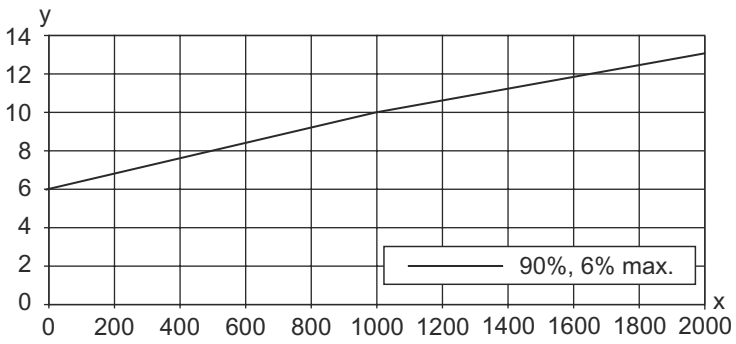

x Distance [mm]
y Reproducibility 1 (Sigma) [mm]

Typ. S/W error

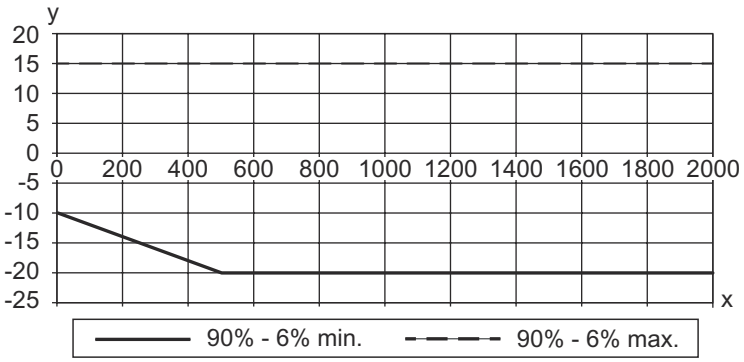

x Distance [mm]
y S/W Error

Diagrams

Typ. accuracy (absolute measurement error)

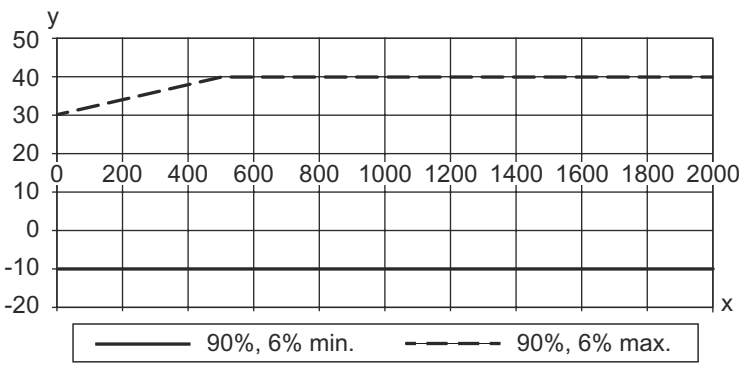

x Distance [mm]
y Accuracy 10kLux

Operation and display

LED	Display	Meaning
1	Green, continuous light	Ready
2	Yellow, continuous light	Object detected

Part number code

Part designation: **ODT5B D-E.FF/GG.HH-JJ**

ODT5B	**Operating principle / construction** ODT5B: Distance diffuse sensor with background suppression
D	**Light type** L1: Laser Class 1 (red light) IL1: Laser Class 1 (infrared light)
E	**Preset range (optional)** xxxx: maximum operating range [mm]
FF	**Operating range adjustment** n/a: standard XV: Speed version 3: teach-in via button
GG	**Switching output / Function** n/a: standard L: IO-Link interface (SIO mode: PNP light switching, NPN dark switching) 6: push-pull switching output, PNP light switching, NPN dark switching
HH	**Electrical connection** n/a: cable, standard length 2000 mm, 4-wire M8: M8 connector, 4-pin (plug)

Note

A list with all available device types can be found on the Leuze website at www.leuze.com.

Notes

Observe intended use!

- This product is not a safety sensor and is not intended as personnel protection.
- The product may only be put into operation by competent persons.
- Only use the product in accordance with its intended use.

For UL applications:

- For UL applications, use is only permitted in Class 2 circuits in accordance with the NEC (National Electric Code).
- These proximity switches shall be used with UL Listed Cable assemblies rated 30V, 0.5A min, in the field installation, or equivalent (categories: CYJV/CYJV7 or PVVA/PVVA7)

ATTENTION! LASER RADIATION – CLASS 1 LASER PRODUCT

The device satisfies the requirements of IEC 60825-1:2014 / EN 60825-1:2014+A11:2021 safety regulations for a product of **laser class 1** and complies with 21 CFR 1040.10 except for conformance with IEC 60825-1 Ed. 3., as described in Laser Notice No. 56, dated May 8, 2019.

- Observe the applicable statutory and local laser protection regulations.
- The device must not be tampered with and must not be changed in any way.
  There are no user-serviceable parts inside the device.
  There are no user-serviceable parts inside the device.
  Repairs must only be performed by Leuze electronic GmbH + Co. KG.

Further information

- Sum of the output currents for both outputs 100 mA
- When starting the sensor below 0°C, a warmup time of one minute is required until the first teach-in
- All values in the ‘Optical Data’ and ‘Measurement Data’ sections of the data sheet refer to an ambient light level of 10,000 lx (sunlight)
- If both independent switching outputs are taught and evaluated, it is recommended to teach the switching output on pin 4 (or the black wire) to the more distant value and the switching output on pin 2 (or the white wire) to the closer value.
- The open-circuit current is 0–30 mA (>0°C) and 0–50 mA (<0°C). At temperatures <10°C, the switch-on current is 0–50 mA for max. 1 minute.

Accessories

Connection technology - Connection cables

	Part no.	Designation	Article	Description
	50130652	KD U-M12-4A-V1-050	Connection cable	Application: Chemical resistant Connection 1: Connector, M12, Axial, Female, A-coded, 4 -pin Connector, LED: No Connection 2: Open end Shielded: No Cable length: 5,000 mm Sheathing material: PVC

Accessories

	Part no.	Designation	Article	Description
	50130690	KD U-M12-4W-V1-050	Connection cable	Application: Chemical resistant Connection 1: Connector, M12, Angled, Female, A-coded, 4 -pin Connector, LED: No Connection 2: Open end Shielded: No Cable length: 5,000 mm Sheathing material: PVC

Mounting technology - Mounting brackets

	Part no.	Designation	Article	Description
	50118542	BT 200M.5	Mounting bracket	Design of mounting device: Angle, L-shape Fastening, at system: Through-hole mounting Mounting bracket, at device: Screw type, Suited for M3 screws Type of mounting device: Adjustable Material: Stainless steel
	50124651	BT 205M-10SET	Mounting device set	Contains: 10x Design of mounting device: Angle, L-shape Fastening, at system: Through-hole mounting Mounting bracket, at device: Screw type Type of mounting device: Rigid Material: Metal

Mounting technology - Rod mounts

	Part no.	Designation	Article	Description
	50117829	BTP 200M-D12	Mounting system	Design of mounting device: Protection hood Fastening, at system: For 12 mm rod Mounting bracket, at device: Screw type Type of mounting device: Clampable, Adjustable, Turning, 360° Material: Metal
	50117255	BTU 200M-D12	Mounting system	Contains: 2x M3 x 16 screw, 2 M3 x 20 screws, 2x position washers Design of mounting device: Mounting system Fastening, at system: For 12 mm rod, Sheet-metal mounting Mounting bracket, at device: Screw type, Suited for M3 screws Type of mounting device: Clampable, Adjustable, Turning, 360° Material: Metal

Note
A list with all available accessories can be found on the Leuze website in the Download tab of the article detailed page.