Technical data sheet
Fiber optic amplifier

Part no.: 50154354

LV443B/2X-100-M8

For Illustration purposes only

Contents

- Technical data
- Dimensioned drawings
- Electrical connection
- Operation and display
- Part number code

Technical data

Basic data

Series	443B
Suitable for	Plastic fiber optics

Special version

Special version	Large operating range
	Time function

Optical data

Light source	4 element LED, Red
Wavelength	625 nm
Transmitted-signal shape	Pulsed

Electrical data

Protective circuit	Polarity reversal protection
	Short circuit protected
Fiber optic connection	Clamp, 2 x Ø 2.4mm
Fiber optic connection depth	7 ... 9 mm

Performance data

Supply voltage U_B	12 ... 24 V, DC
Residual ripple	0 ... 10 %, From U_B
Open-circuit current	0 ... 15 mA

Outputs

Number of digital switching outputs	1 Piece(s)

Switching outputs

Type	Digital switching output
Voltage type	DC
Switching current, max.	100 mA
Switching voltage	high: ≥(U_B-2.5V)
	low: ≤ 2.5 V

Switching output 1

Switching element	Transistor, NPN
Switching principle	Light/dark switchable

Time behavior

Switch-on/-off delay	Switch-on/-off delay
Readiness delay	300 ms
Wiping contact	Wiping contact

Mode High Speed (HS)

Switching frequency	2,000 Hz
Response Time	250 µs

Mode Standard (STD)

Switching frequency	500 Hz
Response Time	1,000 µs

Connection

Number of connections	1 Piece(s)

Connection 1

Function	Signal IN
	Signal OUT
	Voltage supply
Type of connection	Cable with connector
Cable length	100 mm
Cable color	Black
Wire cross section	0.14 mm²
Thread size	M8
Type	Male
Material	Plastic
No. of pins	4 -pin

Mechanical data

Design	Cubic
Dimension (W x H x L)	10 mm x 34 mm x 72 mm
Housing material	Plastic
Plastic housing	ABS
Net weight	45 g
Housing color	Black
	Red
Type of fastening	Via optional mounting device

Operation and display

Type of display	LED
Number of LEDs	1 Piece(s)
Operational controls	Push buton
Function of the operational control	Light/dark switching
	Sensitivity adjustment
	Switching range adjustment

Environmental data

Ambient temperature, operation	-10 ... 55 °C
Ambient temperature, storage	-25 ... 75 °C

Certifications

Degree of protection	IP 50
Standards applied	IEC 60947-5-2

Classification

Customs tariff number	85423390
ECLASS 5.1.4	27270905
ECLASS 8.0	27270905
ECLASS 9.0	27270905
ECLASS 10.0	27270905
ECLASS 11.0	27270905
ECLASS 12.0	27270905
ECLASS 13.0	27270905
ECLASS 14.0	27270905
ECLASS 15.0	27270905
ECLASS 16.0	27270905
ETIM 5.0	EC002651
ETIM 6.0	EC002651
ETIM 7.0	EC002651
ETIM 8.0	EC002651
ETIM 9.0	EC002651
ETIM 10.0	EC002651

Dimensioned drawings

All dimensions in millimeters

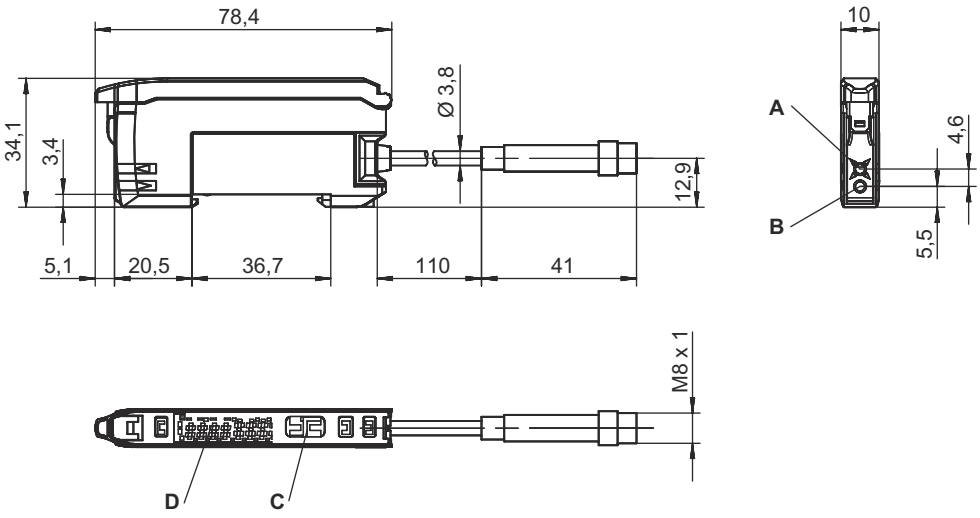

Electrical connection

Connection 1

Function	Signal IN
	Signal OUT
	Voltage supply
Type of connection	Cable with connector
Cable length	100 mm
Cable color	Black
Wire cross section	0.14 mm²
Thread size	M8
Type	Male
Material	Plastic
No. of pins	4 -pin

Pin	Pin assignment
1	V+
2	n.c.
3	GND
4	OUT 1

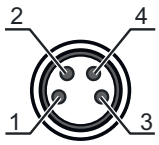

Operation and display

LED	Display	Meaning
1	Orange, continuous light	Switching output/switching state

Part number code

Part designation: **AAAAAAB.CC/DD-EEEEEE**

AAAAAA	**Operating principle / construction** LV453B: Fiber Optic Amplifier - Standard (Light/Dark Switchable) LV443B: Fiber Optic Amplifier - Basic/Manual (Light/Dark Switchable)
B	**Light source** n/a: 4 Element LED, red light
CC	**Device type** n/a: Inclusive (High Speed, Long Range) XR: Long Range version
DD	**Switching output / function / OUT = pin 4 (Black wire)** 4: PNP transistor output, light switching 2: NPN transistor output, light switching X: pin not used
EEEEEE	**Electrical connection** n/a: cable, standard length 2000 mm, 3-wire 100-M8: cable, length 100 mm with M8 connector, 4-pin, axial (plug)

Note

A list with all available device types can be found on the Leuze website at www.leuze.com.