# Technical data sheet
# Safety light curtain receiver
Part no.: 72101006
ELC150R14-600



For Illustration purposes only

**Contents**


- Technical data
- Dimensioned drawings
- Electrical connection
- Circuit diagrams
- Suitable transmitters
- Part number code
- Notes
- Accessories

# Technical data

Leuze

## Basic data

| | |
|---|---|
| **Series** | ELC150 |
| **Device type** | Receiver |
| **Contains** | 2x sliding block |
| **Application** | Finger protection |

## Functions

| | |
|---|---|
| **Functions** | Automatic start/restart |

## Characteristic parameters

| | |
|---|---|
| **Type** | 4, IEC/EN IEC 61496 |
| **SIL** | 3, IEC 61508 |
| **SILCL** | 3, IEC/EN 62061 |
| **Performance Level (PL)** | e, EN ISO 13849-1 |
| **$PFH_D$** | 8E-09 per hour |
| **Mission time $T_M$** | 20 years, EN ISO 13849-1 |
| **Category** | 4, EN ISO 13849 |

## Protective field data

| | |
|---|---|
| **Resolution** | 14 mm |
| **Protective field height** | 600 mm |

## Optical data

| | |
|---|---|
| **Synchronization** | Optical between transmitter and receiver |

## Electrical data

| | |
|---|---|
| **Protective circuit** | Overvoltage protection |
| | Short circuit protected |

### Performance data

| | |
|---|---|
| **Supply voltage $U_B$** | 24 V, DC, -20 ... 20 % |
| **Current consumption, max.** | 100 mA |

### Outputs

| | |
|---|---|
| **Number of safety-related switching outputs (OSSDs)** | 2 Piece(s) |

#### Safety-related switching outputs

| | |
|---|---|
| **Type** | Safety-related switching output OSSD |
| **Switching voltage high, min.** | 18 V |
| **Switching voltage low, max.** | 2.5 V |
| **Switching voltage, type.** | 22.5 V |
| **Voltage type** | DC |
| **Current load, max.** | 50 mA |
| **Load inductivity** | 500,000 µH |
| **Load capacity** | 0.03 µF |
| **Residual current, max.** | 0.5 mA |
| **Voltage drop** | 1.5 V |

#### Safety-related switching output 1

| | |
|---|---|
| **Assignment** | Connection 1, pin 2 |
| **Switching element** | Transistor, PNP |

#### Safety-related switching output 2

| | |
|---|---|
| **Assignment** | Connection 1, pin 4 |
| **Switching element** | Transistor, PNP |

## Time behavior

| | |
|---|---|
| **Response time** | 9.3 ms |
| **Restart delay time** | 100 ms |

## Connection

| | |
|---|---|
| **Number of connections** | 1 Piece(s) |

### Connection 1

| | |
|---|---|
| **Function** | Machine interface |
| **Type of connection** | Cable with connector |
| **Cable length** | 300 mm |
| **Sheathing material** | PUR |
| **Number of conductors** | 4 -wire |
| **Thread size** | M12 |
| **Material** | Metal |
| **No. of pins** | 4 -pin |

### Cable properties

| | |
|---|---|
| **Permissible conductor cross section, type.** | 0.25 mm² |
| **Length of connection cable, max.** | 25 m |
| **Permissible cable resistance to load, max.** | 20 Ω |

## Mechanical data

| | |
|---|---|
| **Dimension (W x H x L)** | 34.7 mm x 615 mm x 39.3 mm |
| **Housing material** | Metal |
| **Metal housing** | Aluminum |
| **Lens cover material** | Plastic / PMMA |
| **Material of end caps** | Diecast zinc |
| **Net weight** | 930 g |
| **Housing color** | Yellow, RAL 1021 |
| **Type of fastening** | Groove mounting |
| | Mounting brackets |

## Operation and display

| | |
|---|---|
| **Type of display** | LED |
| **Number of LEDs** | 6 Piece(s) |

## Environmental data

| | |
|---|---|
| **Ambient temperature, operation** | 0 ... 50 °C |
| **Ambient temperature, storage** | -30 ... 70 °C |
| **Relative humidity (non-condensing)** | 0 ... 95 % |

## Certifications

| | |
|---|---|
| **Degree of protection** | IP 65 |
| **Protection class** | III |
| **Approvals** | c UL US |
| | KCs |
| | TÜV Süd |
| **Vibration resistance** | 50 m/s² |
| **US patents** | US 6,418,546 B |

# Technical data

| | |
|---|---|
| **Customs tariff number** | 85365019 |
| **ECLASS 5.1.4** | 27272704 |
| **ECLASS 8.0** | 27272704 |
| **ECLASS 9.0** | 27272704 |
| **ECLASS 10.0** | 27272704 |
| **ECLASS 11.0** | 27272704 |
| **ECLASS 12.0** | 27272704 |
| **ECLASS 13.0** | 27272704 |
| **ECLASS 14.0** | 27272704 |
| **ECLASS 15.0** | 27272704 |
| **ECLASS 16.0** | 27272704 |
| **ETIM 5.0** | EC002549 |
| **ETIM 6.0** | EC002549 |
| **ETIM 7.0** | EC002549 |
| **ETIM 8.0** | EC002549 |
| **ETIM 9.0** | EC002549 |
| **ETIM 10.0** | EC002549 |
| **UNSPSC 26.08** | 46171620 |

# Dimensioned drawings

All dimensions in millimeters

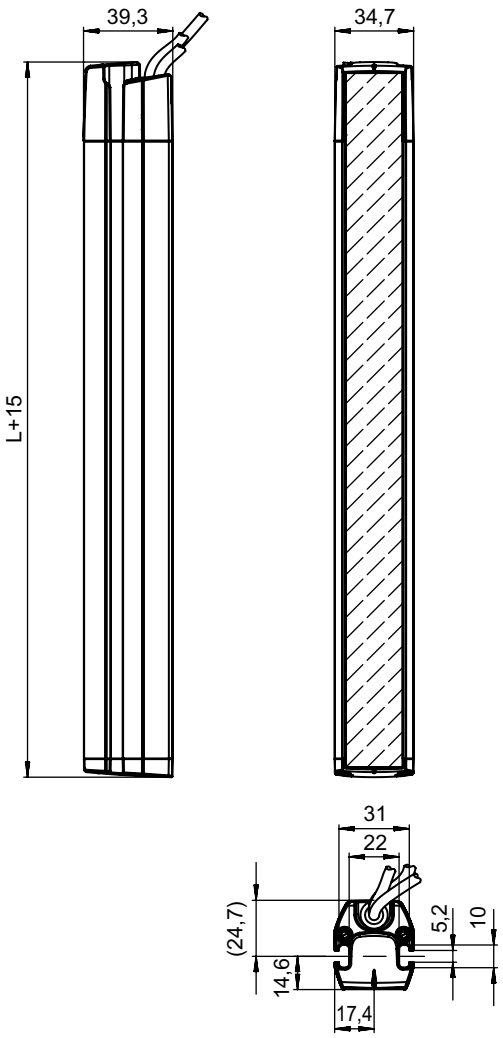


L Protective field length

# Electrical connection

## Connection 1

| | |
|---|---|
| **Function** | Machine interface |
| **Type of connection** | Cable with connector |
| **Cable length** | 300 mm |
| **Sheathing material** | PUR |
| **Cable color** | Black |
| **Number of conductors** | 4 -wire |
| **Wire cross section** | 0.2 mm² |
| **Thread size** | M12 |
| **Type** | Male |
| **Material** | Metal |
| **No. of pins** | 4 -pin |
| **Encoding** | A-coded |

# Electrical connection

| Pin | Pin assignment | Conductor color |
|---|---|---|
| 1 | +24 V | Brown |
| 2 | OSSD1 | White |
| 3 | 0 V | Blue |
| 4 | OSSD2 | Black |

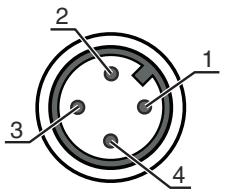


# Circuit diagrams

## Connection diagram receiver

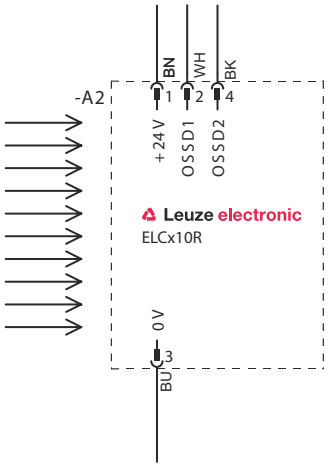


## Circuit diagram example with downstream MSI-SR4B safety relay

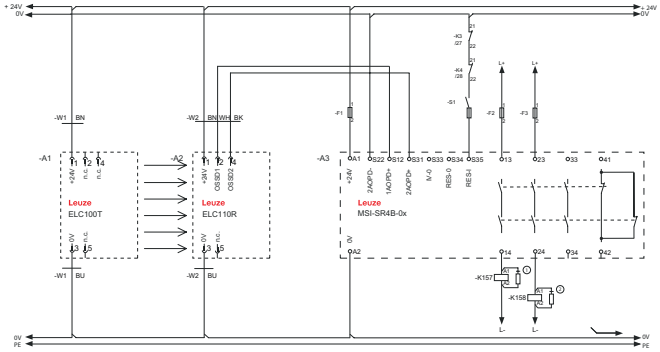


1.2 Spark extinction circuit, suitable spark extinction provided

# Suitable transmitters

| | Part no. | Designation | Article | Description |
|---|---|---|---|---|
|  | 72100006 | ELC105T14-600 | Safety light curtain transmitter | Resolution: 14 mm<br>Protective field height: 600 mm<br>Operating range: 0.5 ... 3 m<br>Connection: Cable with connector, M12, Metal, 4 -pin, 300 mm, PUR |

# Part number code

Part designation: **ELC1yyzaa-hhhh**

| ELC | Safety light curtain |
|---|---|
| **1** | **Series**<br>1: ELC150 |
| **yy** | **Function classes**<br>00: transmitter<br>50: Receiver – automatic restart |
| **z** | **Device type**<br>T: transmitter<br>R: receiver |
| **a** | **Resolution**<br>14: 14 mm<br>17: 17 mm<br>30F: 30 mm |
| **hhhh** | **Protective field height**<br>300 … 1500: from 300 mm to 1500 mm |

**Note**

- A list with all available device types can be found on the Leuze website at www.leuze.com.

# Notes

**Observe intended use!**

- The product may only be put into operation by competent persons.
- Only use the product in accordance with its intended use.

# Accessories

## Connection technology - Connection cables

| | Part no. | Designation | Article | Description |
|---|---|---|---|---|
|  | 50133860 | KD S-M12-5A-P1-050 | Connection cable | Application: Oil and lubricant resistant<br>Connection 1: Connector, M12, Axial, Female, A-coded, 5 -pin<br>Connector, LED: No<br>Connection 2: Open end<br>Shielded: Yes<br>Cable length: 5,000 mm<br>Sheathing material: PUR |

## Mounting technology - Other

| | Part no. | Designation | Article | Description |
|---|---|---|---|---|
| 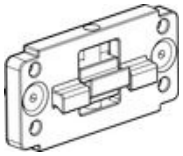 | 424439 | BT-2P45 | Mounting bracket | Contains: 2x BT-P45<br>Bore hole 1: M6<br>Bore hole 2: M6<br>Design of mounting device: Mounting clamp<br>Fastening, at system: Groove mounting<br>Mounting bracket, at device: Groove mounting<br>Type of mounting device: Clampable, Suitable for mounting in UDC-S2, DC-S2 device columns<br>Material: Metal |

# Accessories

## Services

| | Part no. | Designation | Article | Description |
|---|---|---|---|---|
|  | S981050 | CS40-I-140 | Safety inspection | Details: Checking of a safety light barrier application in accordance with current standards and guidelines. Inclusion of the device and machine data in a database, production of a test log per application.<br>Conditions: It must be possible to stop the machine, support provided by customer's employees and access to the machine for Leuze employees must be ensured. |
| 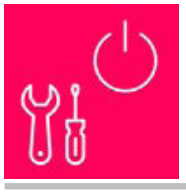 | S981046 | CS40-S-140 | Start-up support | Details: For safety devices including stopping time measurement and initial inspection.<br>Conditions: Devices and connection cables are already mounted, price not including travel costs and, if applicable, accommodation expenses. |

**Note**



↳ A list with all available accessories can be found on the Leuze website in the Download tab of the article detailed page.