Technical data sheet

Polarized retro-reflective photoelectric sensor set

Part no.: 50150979

SET PRK5B.D/4X-200-M12+BTU200M

For Illustration purposes only

Contents

- Set consists of
- Technical data
- Dimensioned drawings
- Electrical connection
- Diagrams
- Operation and display
- Reflectors & reflective tapes
- Part number code
- Notes
- Accessories

IP 67

Set consists of

	Quantity	Part no.	Designation	Article	Description
	1	50150255	PRK5B.D/4X-200-M12	Polarized retro-reflective photoelectric sensor	Application: Detection of stretch-wrapped objects Operating range limit: 0.03 ... 5 m Light source: LED, Red Supply voltage: DC Digital switching outputs: 1 Piece(s) Switching output 1: Transistor, PNP, Light switching (dark switching by reversing polarity of UB) Switching frequency: 500 Hz Connection: Cable with connector, 200 mm, M12, Plastic, 3 -wire, 4 -pin

Technical data

Basic data

Series	5B
Operating principle	Reflection principle
Contains	Mounting system
Application	Detection of stretch-wrapped objects
Pre-mounted on	Mounting system

Special version

Special version	Article set

Optical data

Operating range	0.04 ... 4 m (guaranteed operating range), With reflector TK(S) 100x100
Operating range limit	0.03 ... 5 m (typical operating range), With reflector TK(S) 100x100
Light source	LED, Red
Wavelength	645 nm
Transmitted-signal shape	Pulsed
LED group	Exempt group (in acc. with EN 62471)

Electrical data

Protective circuit	Polarity reversal protection
	Short circuit protected

Performance data

Supply voltage U_B	10 ... 30 V, DC, Incl. residual ripple
Residual ripple	0 ... 15 %, From U_B
Open-circuit current	0 ... 20 mA

Outputs

Number of digital switching outputs	1 Piece(s)

Switching outputs

Type	Digital switching output
Voltage type	DC
Switching current, max.	50 mA
Switching voltage	high: ≥(U_B-2.5V)
	low: ≤ 2.5 V

Switching output 1

Switching element	Transistor, PNP
Switching principle	Light switching (dark switching by reversing polarity of U_B)

Time behavior

Switching frequency	500 Hz
Response time	1 ms
Readiness delay	300 ms

Connection

Number of connections	1 Piece(s)

Connection 1

Function	Signal OUT
	Voltage supply
Type of connection	Cable with connector
Cable length	200 mm
Sheathing material	PVC
Cable color	Black
Number of conductors	3 -wire
Wire cross section	0.14 mm²
Thread size	M12
Type	Male
Material	Plastic
No. of pins	4 -pin
Encoding	A-coded

Mechanical data

Dimension (W x H x L)	11 mm x 32.4 mm x 20 mm
Housing material	Plastic
Plastic housing	PC-ABS
Lens cover material	Plastic
Net weight	40 g
Housing color	Black
	Red
Type of fastening	Two M3 threaded sleeves
	Via optional mounting device
Recommended tightening torque for M3 fastening	0.9 N·m
Compatibility of materials	ECOLAB

Operation and display

Type of display	LED
Number of LEDs	2 Piece(s)

Environmental data

Ambient temperature, operation	-40 ... 60 °C
Ambient temperature, storage	-40 ... 70 °C

Certifications

Degree of protection	IP 67
Protection class	III
Standards applied	IEC 60947-5-2

Technical data

Customs tariff number	85365019
ECLASS 5.1.4	27270902
ECLASS 8.0	27270902
ECLASS 9.0	27270902
ECLASS 10.0	27270902
ECLASS 11.0	27270902
ECLASS 12.0	27270902
ECLASS 13.0	27270902
ECLASS 14.0	27270902
ECLASS 15.0	27270902
ECLASS 16.0	27270902
ETIM 5.0	EC002717
ETIM 6.0	EC002717
ETIM 7.0	EC002717
ETIM 8.0	EC002717
ETIM 9.0	EC002717
ETIM 10.0	EC002717

Dimensioned drawings

All dimensions in millimeters

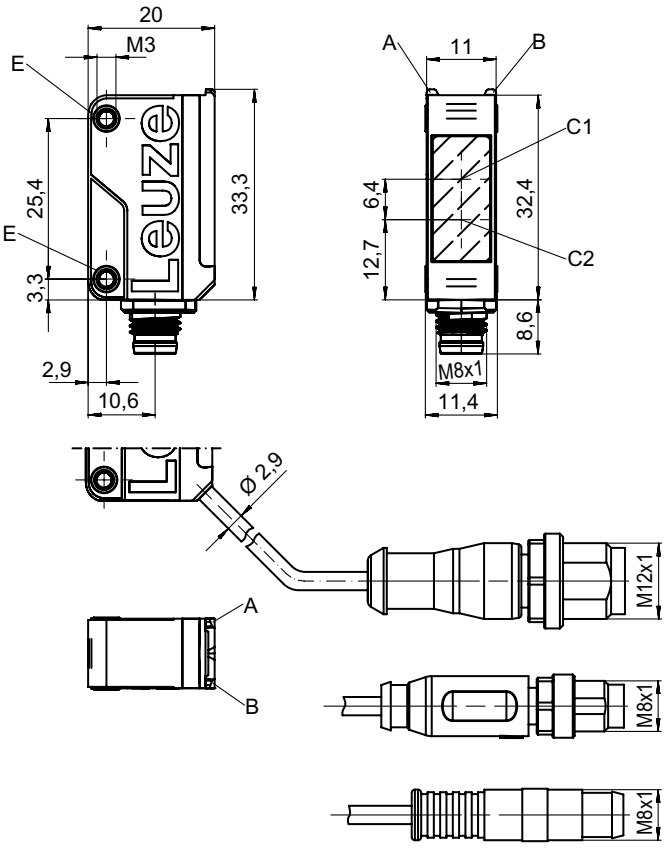

A Green LED
B Yellow LED
C1 Receiver
C2 Transmitter
E Threaded sleeve

Dimensioned drawings

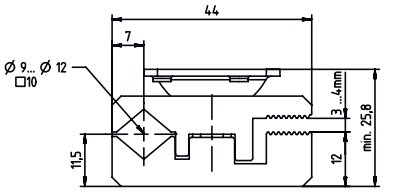

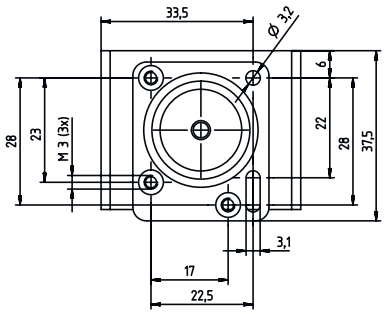

Electrical connection

Connection 1

Function	Signal OUT
	Voltage supply
Type of connection	Cable with connector
Cable length	200 mm
Sheathing material	PVC
Cable color	Black
Number of conductors	3 -wire
Wire cross section	0.14 mm²
Thread size	M12
Type	Male
Material	Plastic
No. of pins	4 -pin
Encoding	A-coded

Pin	Pin assignment
1	V+
2	n.c.
3	GND
4	OUT 1

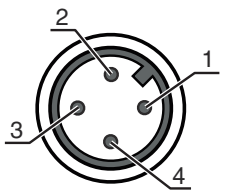

Diagrams

Typ. response behavior (TKS100x100)

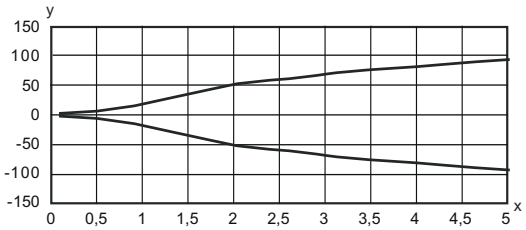

x Distance [m]
y Misalignment [mm]

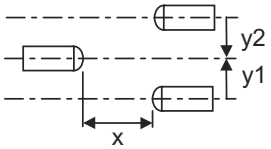

Typ. function reserve

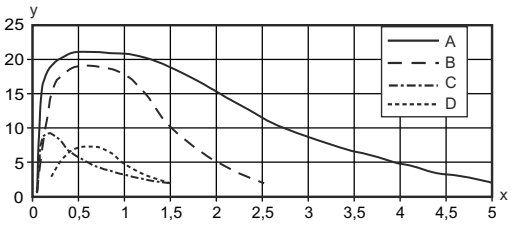

x Distance [m]
y Function reserve

A TKS 100x100
B TKS 40x60.A
C TKS 20x40
D Film REF 4-A-50x50

Operation and display

LED	Display	Meaning
1	Yellow, continuous light	Light path free
	Yellow, flashing	Light path free, no function reserve
2	Green, continuous light	Operational readiness

Reflectors & reflective tapes

	Part no.	Designation	Operating range Operating range limit	Description
	50108300	REF 4-A-50x50	0.25 ... 1.2 m 0.2 ... 1.5 m	Design: Rectangular Reflective surface: 50 mm x 50 mm Material: Plastic Chemical designation of the material: PMMA Fastening: Self-adhesive
	50024127	TK 82.2	0.04 ... 3.5 m 0.03 ... 4.2 m	Design: Round Triple reflector size: 4 mm Reflective surface, diameter: 79 mm Material: Plastic Base material: Plastic Chemical designation of the material: PMMA8N Fastening: Through-hole mounting, Rear side can be glued

Reflectors & reflective tapes

	Part no.	Designation	Operating range Operating range limit	Description
	50022816	TKS 100X100	0.04 ... 4 m 0.03 ... 5 m	Design: Rectangular Triple reflector size: 4 mm Reflective surface: 96 mm x 96 mm Material: Plastic Base material: Plastic Chemical designation of the material: PMMA8N Fastening: Through-hole mounting, Adhesive
	50081283	TKS 20X40	0.05 ... 1.1 m 0.04 ... 1.4 m	Design: Rectangular Triple reflector size: 2.3 mm Reflective surface: 16 mm x 38 mm Material: Plastic Base material: Plastic Chemical designation of the material: PMMA8N Fastening: Through-hole mounting, Adhesive
	50023525	TKS 30X50	0.05 ... 1.4 m 0.04 ... 1.8 m	Design: Rectangular Triple reflector size: 3 mm Reflective surface: 27 mm x 44 mm Material: Plastic Base material: Plastic Chemical designation of the material: PMMA8N Fastening: Through-hole mounting, Adhesive
	50040820	TKS 40X60	0.04 ... 2.2 m 0.03 ... 2.7 m	Design: Rectangular Triple reflector size: 4 mm Reflective surface: 37 mm x 56 mm Material: Plastic Base material: Plastic Chemical designation of the material: PMMA8N Fastening: Through-hole mounting, Adhesive
	50125455	TKS 40x60.A	0.04 ... 2 m 0.03 ... 2.5 m	Contains: 10x Design: Rectangular Triple reflector size: 2.3 mm Reflective surface: 36.8 mm x 55.8 mm Material: Plastic Base material: Plastic Chemical designation of the material: PMMA8N Fastening: Screw type, Adhesive

Part number code

Part designation: **AAA5B D-E.FF/GG.HH-JJ**

AAA5B	**Operating principle / construction** LS5B: Throughbeam photoelectric sensor transmitter LE5B: Throughbeam photoelectric sensor receiver PRK5B: Retro-reflective photoelectric sensor with polarization filter HT5B: Diffuse reflection sensor with background suppression ET5B: Energetic diffuse reflection sensor
D	**Light type** n/a: red light I: infrared light PP: Power PinPoint® LED
E	**Preset range (optional)** n/a: operating range acc. to data sheet xxxF: Preset range [mm]
FF	**Equipment** 1: 270° potentiometer D: Detection of stretch-wrapped objects M: Detection of semi-transparent media and transparent films XL: Extra long light spot n/a with retro-reflective photoelectric sensors (PRK): operating range not adjustable n/a with ET / HT: range adjustable via 8-turn potentiometer

Part number code

GG	**Switching output / Function** 2: NPN transistor output, light switching N: NPN transistor output, dark switching 4: PNP transistor output, light switching P: PNP transistor output, dark switching 9: deactivation input (deactivation with high signal) X: pin not used
HH	**Electrical connection** n/a: cable, standard length 2000 mm, 3-wire M8: M8 connector, 4-pin (plug) 200-M12: cable, length 200 mm with M12 connector, 4-pin, axial (plug) 200-M8: cable, length 200 mm with M8 connector, 4-pin, axial (plug) 200-M8.3: cable, length 200 mm with M8 connector, 3-pin, axial (plug) 200-M8.1: Cable, length 200 mm with snap-in M8 connector, 4-pin (plug) M8.3: M8 connector, 3-pin (plug)
JJ	**Version** Y1: mounting holes without threaded sleeve

Note

- A list with all available device types can be found on the Leuze website at www.leuze.com.

Notes

Observe intended use!

- This product is not a safety sensor and is not intended as personnel protection.
- The product may only be put into operation by competent persons.
- Only use the product in accordance with its intended use.

For UL applications:

- Only for use in "class 2" circuits
- These proximity switches shall be used with UL Listed Cable assemblies rated 30V, 0.5A min, in the field installation, or equivalent (categories: CYJV/CYJV7 or PVVA/PVVA7)

Accessories

Connection technology - Connection cables

	Part no.	Designation	Article	Description
	50130652	KD U-M12-4A-V1-050	Connection cable	Application: Chemical resistant Connection 1: Connector, M12, Axial, Female, A-coded, 4 -pin Connector, LED: No Connection 2: Open end Shielded: No Cable length: 5,000 mm Sheathing material: PVC

Accessories

	Part no.	Designation	Article	Description
	50130690	KD U-M12-4W-V1-050	Connection cable	Application: Chemical resistant Connection 1: Connector, M12, Angled, Female, A-coded, 4 -pin Connector, LED: No Connection 2: Open end Shielded: No Cable length: 5,000 mm Sheathing material: PVC

Note	
	A list with all available accessories can be found on the Leuze website in the Download tab of the article detailed page.