# Technical data sheet
# Safety light curtain receiver
## Part no.: 68001407
## MLC510R40-750

For Illustration purposes only

**Contents**


- Technical data
- Dimensioned drawings
- Electrical connection
- Circuit diagrams
- Operation and display
- Suitable transmitters
- Part number code
- Notes
- Accessories




Leuze electronic GmbH + Co. KG
In der Braike 1, D-73277 Owen/Germany
info@leuze.com • www.leuze.com
Phone: +49 7021 573-0 • Fax: +49 7021 573-199


We reserve the right to make technical changes

# Technical data

## Basic data

| | |
|---|---|
| **Series** | MLC 500 |
| **Device type** | Receiver |
| **Contains** | 2x BT-NC sliding block |
| **Application** | Access guarding |
| | Danger zone guarding |
| | Hand protection |

## Functions

| | |
|---|---|
| **Function package** | Basic |
| **Functions** | Automatic start/restart |
| | Transmission channel changeover |

## Characteristic parameters

| | |
|---|---|
| **Type** | 4, IEC/EN 61496 |
| **SIL** | 3, IEC 61508 |
| **SILCL** | 3, IEC/EN 62061 |
| **Performance Level (PL)** | e, EN ISO 13849-1 |
| **$PFH_D$** | 7.73E-09 per hour |
| **Mission time $T_M$** | 20 years, EN ISO 13849-1 |
| **Category** | 4, EN ISO 13849 |

## Protective field data

| | |
|---|---|
| **Resolution** | 40 mm |
| **Protective field height** | 750 mm |

## Optical data

| | |
|---|---|
| **Synchronization** | Optical between transmitter and receiver |

## Electrical data

| | |
|---|---|
| **Protective circuit** | Overvoltage protection |
| | Short circuit protected |

### Performance data

| | |
|---|---|
| **Supply voltage $U_B$** | 24 V, DC, -20 ... 20 % |
| **Current consumption, max.** | 150 mA |
| **Fuse** | 2 A semi time-lag |

### Outputs

| | |
|---|---|
| **Number of safety-related switching outputs (OSSDs)** | 2 Piece(s) |

#### Safety-related switching outputs

| | |
|---|---|
| **Type** | Safety-related switching output OSSD |
| **Switching voltage high, min.** | 18 V |
| **Switching voltage low, max.** | 2.5 V |
| **Switching voltage, type.** | 22.5 V |
| **Voltage type** | DC |
| **Current load, max.** | 380 mA |
| **Load inductivity** | 2,000 µH |
| **Load capacity** | 0.3 µF |
| **Residual current, max.** | 0.2 mA |
| **Residual current, type.** | 0.002 mA |
| **Voltage drop** | 1.5 V |

#### Safety-related switching output 1

| | |
|---|---|
| **Assignment** | Connection 1, pin 2 |
| **Switching element** | Transistor, PNP |

#### Safety-related switching output 2

| | |
|---|---|
| **Assignment** | Connection 1, pin 4 |
| **Switching element** | Transistor, PNP |

## Time behavior

| | |
|---|---|
| **Response time** | 8 ms |
| **Restart delay time** | 100 ms |

## Connection

| | |
|---|---|
| **Number of connections** | 1 Piece(s) |

### Connection 1

| | |
|---|---|
| **Function** | Machine interface |
| **Type of connection** | Connector |
| **Thread size** | M12 |
| **Material** | Metal |
| **No. of pins** | 5 -pin |

### Cable properties

| | |
|---|---|
| **Permissible conductor cross section, type.** | 0.25 mm² |
| **Length of connection cable, max.** | 100 m |
| **Permissible cable resistance to load, max.** | 200 Ω |

## Mechanical data

| | |
|---|---|
| **Dimension (W x H x L)** | 29 mm x 816 mm x 35.4 mm |
| **Housing material** | Metal |
| **Metal housing** | Aluminum |
| **Lens cover material** | Plastic / PMMA |
| **Material of end caps** | Diecast zinc |
| **Net weight** | 900 g |
| **Housing color** | Yellow, RAL 1021 |
| **Type of fastening** | Groove mounting |
| | Mounting brackets |
| | Mounting on Device Column |
| | Swivel mount |

## Operation and display

| | |
|---|---|
| **Type of display** | LED |
| **Number of LEDs** | 2 Piece(s) |

## Environmental data

| | |
|---|---|
| **Ambient temperature, operation** | -30 ... 55 °C |
| **Ambient temperature, storage** | -30 ... 70 °C |
| **Relative humidity (non-condensing)** | 0 ... 95 % |

## Certifications

| | |
|---|---|
| **Degree of protection** | IP 65 |
| **Protection class** | III |
| **Approvals** | c TÜV NRTL US |
| | c UL US |
| | KCs |
| | TÜV Süd |
| **Vibration resistance** | 50 m/s² |
| **Shock resistance** | 100 m/s² |
| **US patents** | US 6,418,546 B |

# Technical data

| | |
|---|---|
| **Customs tariff number** | 85365019 |
| **ECLASS 5.1.4** | 27272704 |
| **ECLASS 8.0** | 27272704 |
| **ECLASS 9.0** | 27272704 |
| **ECLASS 10.0** | 27272704 |
| **ECLASS 11.0** | 27272704 |
| **ECLASS 12.0** | 27272704 |
| **ECLASS 13.0** | 27272704 |
| **ECLASS 14.0** | 27272704 |
| **ECLASS 15.0** | 27272704 |
| **ETIM 5.0** | EC002549 |
| **ETIM 6.0** | EC002549 |
| **ETIM 7.0** | EC002549 |
| **ETIM 8.0** | EC002549 |
| **ETIM 9.0** | EC002549 |
| **ETIM 10.0** | EC002549 |

# Dimensioned drawings

All dimensions in millimeters

## Calculation of the effective protective field height $H_{PFE} = H_{PFN} + B + C$

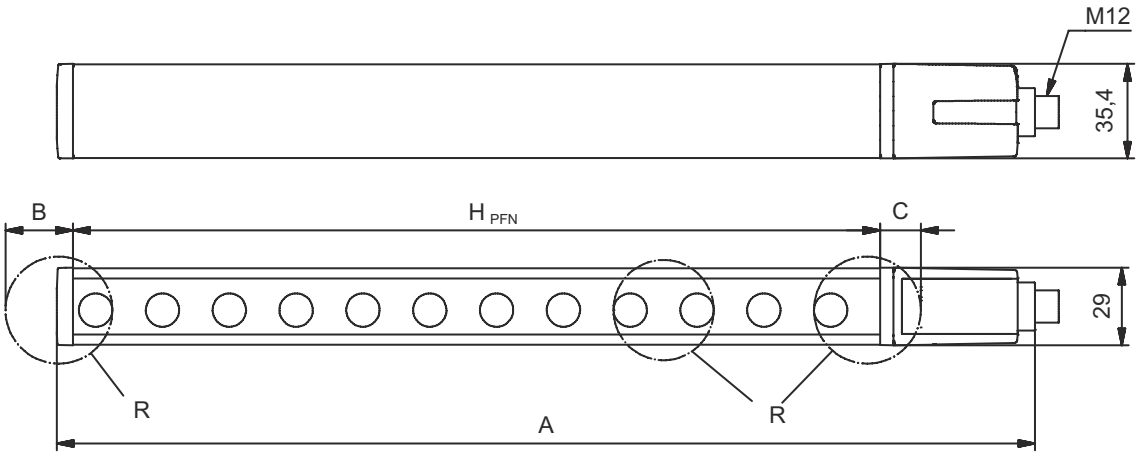


$H_{PFE}$ Effective protective field height = 790 mm
$H_{PFN}$ Nominal protective field height = 750 mm
A Total height = 816 mm
B 25 mm
C 15 mm
R Effective protective field height $H_{PFE}$ goes beyond the dimensions of the optics area to the outer borders of the circles labeled with R.

# Electrical connection

## Connection 1

| | |
|---|---|
| **Function** | Machine interface |
| **Type of connection** | Connector |
| **Thread size** | M12 |
| **Type** | Male |
| **Material** | Metal |
| **No. of pins** | 5 -pin |
| **Encoding** | A-coded |
| **Connector housing** | FE/SHIELD |

# Electrical connection

| Pin | Pin assignment | Conductor color |
|---|---|---|
| 1 | VIN1 | Brown |
| 2 | OSSD1 | White |
| 3 | VIN2 | Blue |
| 4 | OSSD2 | Black |
| 5 | FE/SHIELD | Gray |

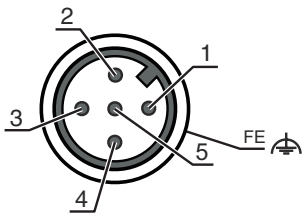


# Circuit diagrams

## Connection diagram receiver

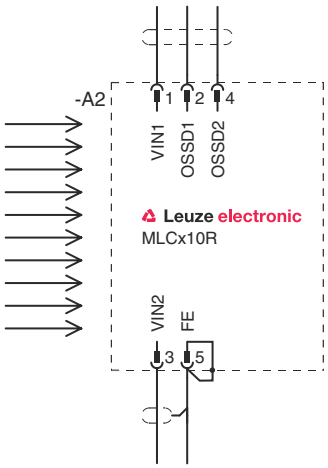


- VIN1 = +24 V, VIN2 = 0 V: transmission channel C1
- VIN1 = 0 V, VIN2 = +24 V: transmission channel C2

## Circuit diagram example with downstream MSI-SR4B safety relay

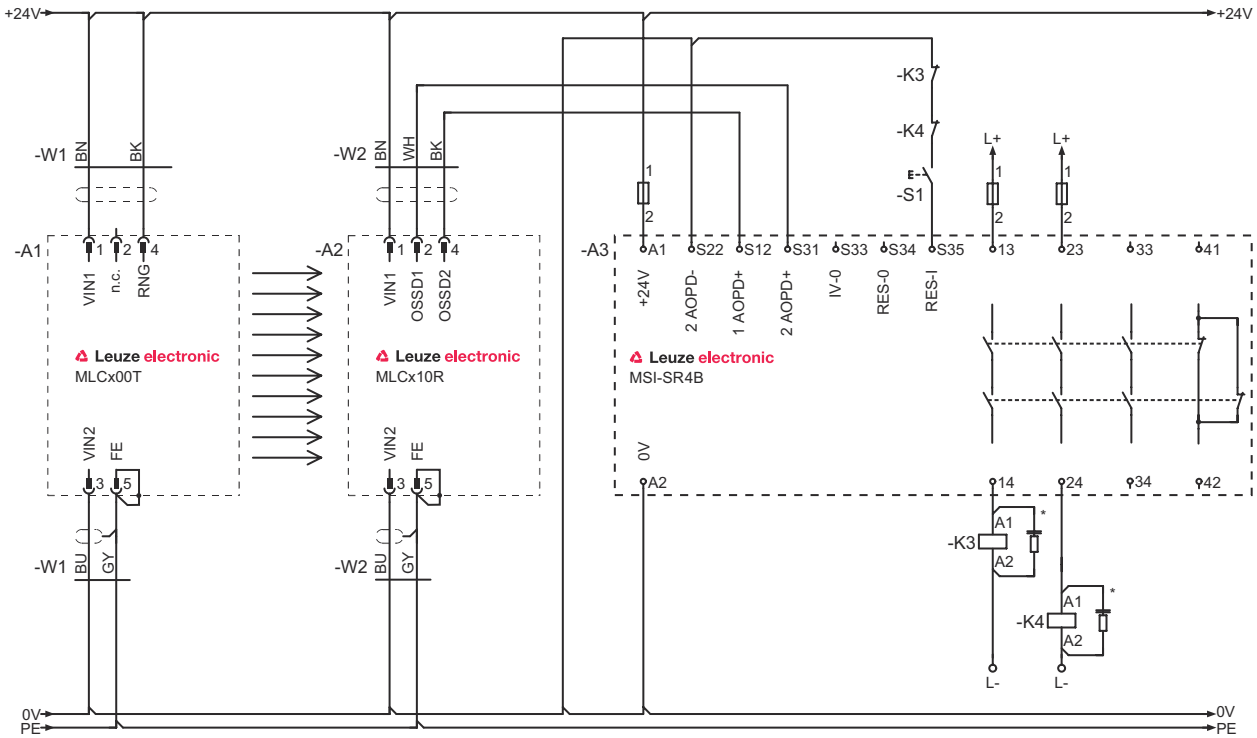

# Operation and display

| LED | Display | Meaning |
|---|---|---|
| 1 | Off | Device switched off |
| | Red, continuous light | OSSD off. |
| | Red, flashing, 1 Hz | External error |
| | Red, flashing, 10 Hz | Internal error |
| | Green, flashing, 1 Hz | OSSD on, weak signal |
| | Green, continuous light | OSSD on |
| 2 | Off | Transmission channel C1 |
| | Red, continuous light | OSSD off, transmission channel C2 |

# Suitable transmitters

| | Part no. | Designation | Article | Description |
|---|---|---|---|---|
| | 68000407 | MLC500T40-750 | Safety light curtain transmitter | Resolution: 40 mm<br>Protective field height: 750 mm<br>Operating range: 0 ... 20 m<br>Connection: Connector, M12, Metal, 5 -pin |
| | 68008407 | MLC502T40-750 | Safety light curtain transmitter | Resolution: 40 mm<br>Protective field height: 750 mm<br>Operating range: 0 ... 20 m<br>Connection: Connector, M12, Metal, 5 -pin |

# Part number code

Part designation: **MLCxyy-za-hhhhei-ooo**

| MLC | Safety light curtain |
|---|---|
| x | **Series**<br>3: MLC 300<br>5: MLC 500 |
| yy | **Function classes**<br>00: transmitter<br>01: transmitter (AIDA)<br>02: transmitter with test input<br>10: basic receiver - automatic restart<br>11: basic receiver - automatic restart (AIDA)<br>20: standard receiver - EDM/RES selectable<br>30: Extended receiver blanking/muting or gating<br>35: Extended receiver – Gating |
| z | **Device type**<br>T: transmitter<br>R: receiver |
| a | **Resolution**<br>14: 14 mm<br>20: 20 mm<br>30: 30 mm<br>40: 40 mm<br>90: 90 mm |
| hhhh | **Protective field height**<br>150 … 3000: from 150 mm to 3000 mm |
| e | **Host/Guest (optional)**<br>H: Host<br>MG: Middle Guest<br>G: Guest |
| i | **Interface (optional)**<br>/A: AS-i |

# Part number code

| MLC | Safety light curtain |
|---|---|
| ooo | **Option**<br>/V: high Vibration-proof<br>EX2: explosion protection (zones 2 + 22)<br>SPG: Smart Process Gating<br>SPG RR: Smart Process Gating – Reduced resolution |

**Note**

- A list with all available device types can be found on the Leuze website at www.leuze.com.

# Notes

**Observe intended use!**

- The product may only be put into operation by competent persons.
- Only use the product in accordance with its intended use.

# Accessories

## Connection technology - Connection cables

| | Part no. | Designation | Article | Description |
|---|---|---|---|---|
| | 50133860 | KD S-M12-5A-P1-050 | Connection cable | Connection 1: Connector, M12, Axial, Female, A-coded, 5 -pin<br>Connector, LED: No<br>Connection 2: Open end<br>Shielded: Yes<br>Cable length: 5.000 mm<br>Sheathing material: PUR |

## Mounting technology - Swivel mounts

| | Part no. | Designation | Article | Description |
|---|---|---|---|---|
| | 429393 | BT-2HF | Mounting bracket set | Fastening, at system: Through-hole mounting<br>Mounting bracket, at device: Clampable<br>Type of mounting device: Turning, 360°<br>Material: Metal, Plastic |

# Accessories

## Services

| | Part no. | Designation | Article | Description |
|---|---|---|---|---|
| | S981050 | CS40-I-140 | Safety inspection | Details: Checking of a safety light barrier application in accordance with current standards and guidelines. Inclusion of the device and machine data in a database, production of a test log per application.<br>Conditions: It must be possible to stop the machine, support provided by customer's employees and access to the machine for Leuze employees must be ensured. |
| | S981046 | CS40-S-140 | Start-up support | Details: For safety devices including stopping time measurement and initial inspection.<br>Conditions: Devices and connection cables are already mounted, price not including travel costs and, if applicable, accommodation expenses. |

| Note |
|---|
| A list with all available accessories can be found on the Leuze website in the Download tab of the article detailed page. |