Technical data sheet
Reflector
Part no.: 50114363
TKS 40x60.UV.HT

For Illustration purposes only

Contents

- Technical data
- Dimensioned drawings

Leuze electronic GmbH + Co. KG
In der Braike 1, D-73277 Owen/Germany
info@leuze.com • www.leuze.com
Phone: +49 7021 573-0 • Fax: +49 7021 573-199

We reserve the right to make technical changes

Technical data

Special version

Special version	Heat resistant

Mechanical data

Design	Rectangular
Direction-dependent	No
Triple reflector size	4 mm
Mounting dimension, width	41 mm
Mounting dimension, height	60 mm
Mounting dimension, thickness	8 mm
Reflective surface, height	56 mm
Reflective surface, width	37 mm
Reflector material	Plastic
Material of base material	Plastic
Polarization-changing	Yes
Chemical designation, reflector material	PMMA8N
Structure, active surface	Triple
Coating	UV-protection
Net weight	14 g
Type of fastening	Adhesive
	Through-hole mounting

Environmental data

Ambient temperature, operation	-40 ... 120 °C

Certifications

Degree of protection	IP 40

Classification

Customs tariff number	90029000
ECLASS 5.1.4	27279203
ECLASS 8.0	27279203
ECLASS 9.0	27273601
ECLASS 10.0	27273601
ECLASS 11.0	27273601
ECLASS 12.0	27273601
ECLASS 13.0	27273601
ECLASS 14.0	27273601
ECLASS 15.0	27273601
ECLASS 16.0	27273601
ETIM 5.0	EC002467
ETIM 6.0	EC002467
ETIM 7.0	EC002467
ETIM 8.0	EC002467
ETIM 9.0	EC002467
ETIM 10.0	EC002467
UNSPSC 26.08	39121551

Dimensioned drawings
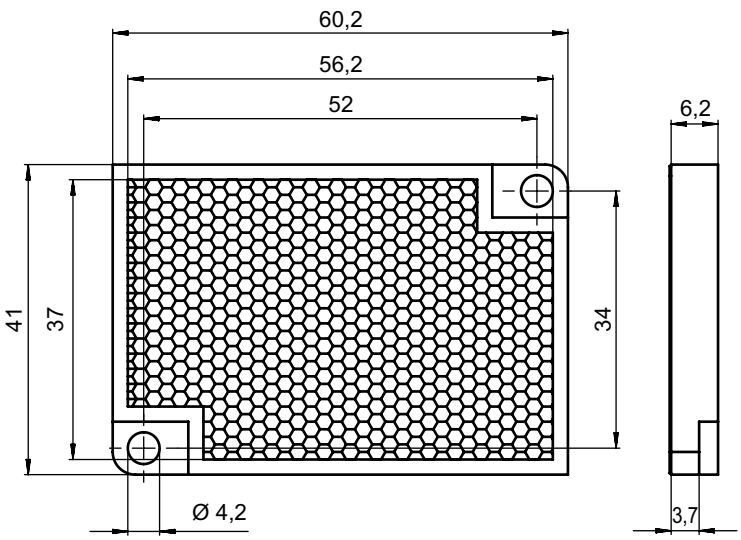
All dimensions in millimeters