Technical data sheet
Throughbeam photoelectric sensor transmitter

Part no.: 50117693

LS5/9D-200-M12

For Illustration purposes only

Contents

- Technical data
- Dimensioned drawings
- Electrical connection
- Diagrams
- Operation and display
- Suitable receivers
- Part number code
- Notes
- Further information
- Accessories

Technical data

Basic data

Series	5
Operating principle	Throughbeam principle
Device type	Transmitter

Special version

Special version	Deactivation input

Optical data

Operating range	0 ... 10 m (guaranteed operating range)
Operating range limit	0 ... 15 m (typical operating range)
Light source	LED, Red
Wavelength	620 nm
Transmitted-signal shape	Pulsed
LED group	Exempt group (in acc. with EN 62471)

Electrical data

Protective circuit	Polarity reversal protection
	Short circuit protected

Performance data

Supply voltage U_B	10 ... 30 V, DC, Incl. residual ripple
Residual ripple	0 ... 15 %, From U_B
Open-circuit current	0 ... 15 mA

Inputs

Number of deactivation inputs	2 Piece(s)

Deactivation inputs

Type	Deactivation input

Deactivation input 1

Assignment	Connection 1, pin 4
Active switching state	Low

Deactivation input 2

Assignment	Connection 1, pin 2
Active switching state	High

Time behavior

Readiness delay	300 ms

Connection

Number of connections	1 Piece(s)

Connection 1

Function	Signal IN
	Voltage supply
Type of connection	Cable with connector
Cable length	200 mm
Sheathing material	PUR
Cable color	Black
Wire cross section	0.2 mm²
Thread size	M12
Type	Male
Material	Plastic
No. of pins	4 -pin
Encoding	A-coded

Mechanical data

Dimension (W x H x L)	14 mm x 32.5 mm x 20.2 mm
Housing material	Plastic
Plastic housing	ABS
Lens cover material	Plastic
Net weight	40 g
Housing color	Black
	Red
Recommended tightening torque for M3 fastening	0.9 N·m

Operation and display

Type of display	LED
Number of LEDs	2 Piece(s)

Environmental data

Ambient temperature, operation	-40 ... 60 °C
Ambient temperature, storage	-40 ... 70 °C

Certifications

Degree of protection	IP 67
Protection class	III
Approvals	c UL US
Standards applied	IEC 60947-5-2

Classification

Customs tariff number	85365019
ECLASS 5.1.4	27270901
ECLASS 8.0	27270901
ECLASS 9.0	27270901
ECLASS 10.0	27270901
ECLASS 11.0	27270901
ECLASS 12.0	27270901
ECLASS 13.0	27270901
ECLASS 14.0	27270901
ECLASS 15.0	27270901
ECLASS 16.0	27270901
ETIM 5.0	EC002716
ETIM 6.0	EC002716
ETIM 7.0	EC002716
ETIM 8.0	EC002716
ETIM 9.0	EC002716
ETIM 10.0	EC002716

Dimensioned drawings

All dimensions in millimeters

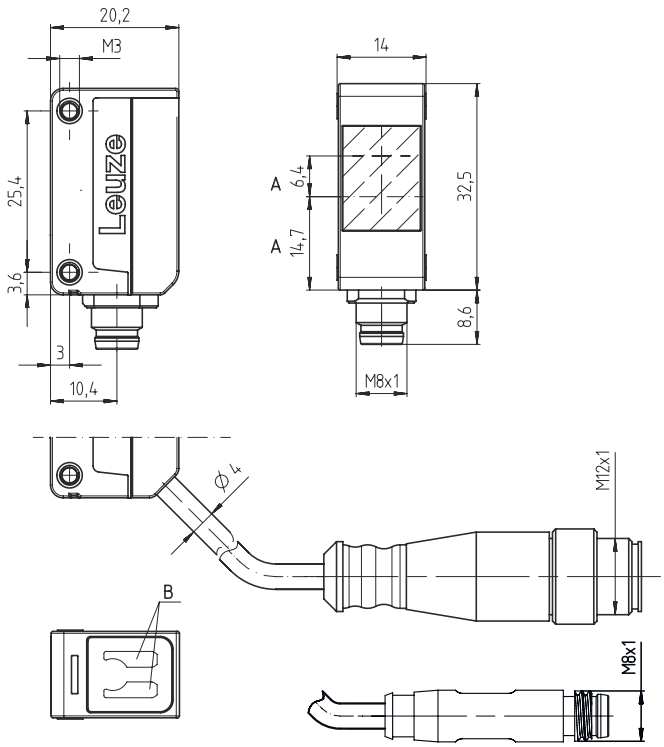

A Optical axis
B Indicator diode

Electrical connection

Connection 1

Function	Signal IN
	Voltage supply
Type of connection	Cable with connector
Cable length	200 mm
Sheathing material	PUR
Cable color	Black
Wire cross section	0.2 mm²
Thread size	M12
Type	Male
Material	Plastic
No. of pins	4 -pin
Encoding	A-coded

Pin	Pin assignment
1	V+
2	In2
3	GND
4	In1

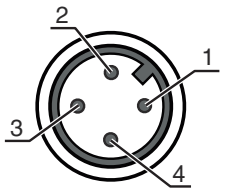

Diagrams

Typ. response behavior

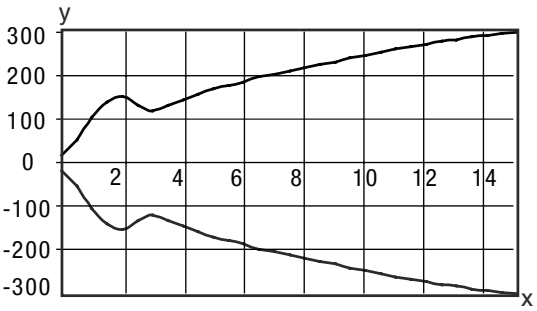

x Distance [m]
y Misalignment [mm]

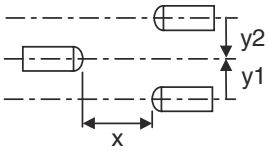

Operation and display

LED	Display	Meaning
1	Green, continuous light	Operational readiness
2	Yellow, continuous light	Transmitted beam active

Suitable receivers

	Part no.	Designation	Operating range Operating range limit	Description
	50117683	LE5/2N-200-M12	0 ... 10 m 0 ... 15 m	Supply voltage: DC Digital switching outputs: 2 Piece(s) Switching output 1: Transistor, NPN, Light switching Switching output 2: Transistor, NPN, Dark switching Switching frequency: 500 Hz Connection: Cable with connector, 200 mm, M12, Plastic, 4 -pin
	50134471	LE5/2X-200-M12	0 ... 10 m 0 ... 15 m	Supply voltage: DC Digital switching outputs: 1 Piece(s) Switching output 1: Transistor, NPN, Light switching Switching frequency: 500 Hz Connection: Cable with connector, 200 mm, M12, Plastic, 4 -pin
	50117690	LE5/4P-200-M12	0 ... 10 m 0 ... 15 m	Supply voltage: DC Digital switching outputs: 2 Piece(s) Switching output 1: Transistor, PNP, Light switching Switching output 2: Transistor, PNP, Dark switching Switching frequency: 500 Hz Connection: Cable with connector, 200 mm, M12, Plastic, 4 -pin
	50134470	LE5/4X-200-M12	0 ... 10 m 0 ... 15 m	Supply voltage: DC Digital switching outputs: 1 Piece(s) Switching output 1: Transistor, PNP, Light switching Switching frequency: 500 Hz Connection: Cable with connector, 200 mm, M12, Plastic, 4 -pin

Part number code

Part designation: **AAA5d.EE/ ff-GG-hh-I**

AAA5	**Operating principle / construction** HT5: diffuse reflection sensor with background suppression LS5: throughbeam photoelectric sensor transmitter LE5: throughbeam photoelectric sensor receiver ET5: energetic diffuse reflection sensor FT5: diffuse reflection sensor with fading PRK5: retro-reflective photoelectric sensor with polarization filter
d	**Light type** n/a: red light I: infrared light
EE	**Equipment** 1: adjustable range M: for semi-transparent objects H: For the detection of transparent films X: reinforced fading 3: teach-in via button R: combination product for reflector DTKS 30x50
ff	**Switching output / function / OUT1OUT2 (OUT1 = pin 4, OUT2 = pin 2)** 2: NPN transistor output, light switching N: NPN transistor output, dark switching 4: PNP transistor output, light switching P: PNP transistor output, dark switching X: pin not used 9: deactivation input (deactivation with high signal) D: Deactivation input (deactivation with low signal)
GG	**Version** P1: narrow light beam
hh	**Electrical connection** n/a: cable, standard length 2000 mm, 4-wire M8: M8 connector, 4-pin (plug) M8.3: M8 connector, 3-pin (plug) 200-M8: cable, length 200 mm with M8 connector, 4-pin, axial (plug) 200-M8.3: cable, length 200 mm with M8 connector, 3-pin, axial (plug) 200-M12: cable, length 200 mm with M12 connector, 4-pin, axial (plug) M8.1: Snap-in, M8 connector, 4-pin (plug)
I	**Parameterization** P1: different configuration

Note

- A list with all available device types can be found on the Leuze website at www.leuze.com.

Notes

Observe intended use!

- This product is not a safety sensor and is not intended as personnel protection.
- The product may only be put into operation by competent persons.
- Only use the product in accordance with its intended use.

For UL applications:

- Only for use in "class 2" circuits
- These proximity switches shall be used with UL Listed Cable assemblies rated 30V, 0.5A min, in the field installation, or equivalent (categories: CYJV/ CYJV7 or PVVA/PVVA7)

Further information

- Sum of the output currents for both outputs, 50 mA for ambient temperatures > 40 °C

Accessories

Connection technology - Connection cables

	Part no.	Designation	Article	Description
	50130652	KD U-M12-4A-V1-050	Connection cable	Application: Chemical resistant Connection 1: Connector, M12, Axial, Female, A-coded, 4 -pin Connector, LED: No Connection 2: Open end Shielded: No Cable length: 5,000 mm Sheathing material: PVC
	50130690	KD U-M12-4W-V1-050	Connection cable	Application: Chemical resistant Connection 1: Connector, M12, Angled, Female, A-coded, 4 -pin Connector, LED: No Connection 2: Open end Shielded: No Cable length: 5,000 mm Sheathing material: PVC

Mounting technology - Mounting brackets

	Part no.	Designation	Article	Description
	50118542	BT 200M.5	Mounting bracket	Design of mounting device: Angle, L-shape Fastening, at system: Through-hole mounting Mounting bracket, at device: Screw type, Suited for M3 screws Type of mounting device: Adjustable Material: Stainless steel
	50124651	BT 205M-10SET	Mounting device set	Contains: 10x Design of mounting device: Angle, L-shape Fastening, at system: Through-hole mounting Mounting bracket, at device: Screw type Type of mounting device: Rigid Material: Metal

Mounting technology - Rod mounts

	Part no.	Designation	Article	Description
	50117829	BTP 200M-D12	Mounting system	Design of mounting device: Protection hood Fastening, at system: For 12 mm rod Mounting bracket, at device: Screw type Type of mounting device: Clampable, Adjustable, Turning, 360° Material: Metal

Accessories

	Part no.	Designation	Article	Description
	50117255	BTU 200M-D12	Mounting system	Contains: 2x M3 x 16 screw, 2 M3 x 20 screws, 2x position washers Design of mounting device: Mounting system Fastening, at system: For 12 mm rod, Sheet-metal mounting Mounting bracket, at device: Screw type, Suited for M3 screws Type of mounting device: Clampable, Adjustable, Turning, 360° Material: Metal

Note	
	A list with all available accessories can be found on the Leuze website in the Download tab of the article detailed page.