Technical data sheet
Inductive switch

Part no.: 50143803

IS 232FM/4NO-7E0-2-S8.3

For Illustration purposes only

Contents

- Technical data
- Dimensioned drawings
- Electrical connection
- Diagrams
- Operation and display
- Part number code
- Notes
- Accessories

Technical data

Basic data

Series	232
type. operating range limit S_n	7 mm
Operating range S_a	0 ... 5.67 mm

Special version

Special version	Reduction factor 1

Electrical data

Protective circuit	Inductive protection
	Polarity reversal protection
	Short circuit protected

Performance data

Supply voltage U_B	10 ... 30 V, DC
Residual ripple	0 ... 10 %, From U_B
Open-circuit current	0 ... 10 mA
Temperature drift, max. (in % of S_r)	10 %, Over the entire operating temperature range
Repeatability, max. (in % of S_r)	5 %, For U_B = 20 … 30 V DC, ambient temperature T_a = 23 °C ± 5 °C
Switching hysteresis	15 %

Outputs

Number of digital switching outputs	1 Piece(s)

Switching outputs

Voltage type	DC
Switching current, max.	200 mA
Switching voltage	high: ≥(U_B-2V)
	low: ≤ 2 V
Residual current, max.	0.1 mA
Voltage drop	2 V

Switching output 1

Switching element	Transistor, PNP
Switching principle	NO (normally open)

Time behavior

Switching frequency	180 Hz
Readiness delay	25 ms

Connection

Number of connections	1 Piece(s)

Connection 1

Function	Signal OUT
	Voltage supply
Type of connection	Cable with connector
Cable length	200 mm
Sheathing material	PVC
Cable color	Gray
Number of conductors	3 -wire
Thread size	M8
Type	Male
Material	Metal
No. of pins	3 -pin
Encoding	A-coded
Version	Axial

Mechanical data

Design	Cubic
Dimension (W x H x L)	20 mm x 8 mm x 32 mm
Type of installation	Embedded/flush
Housing material	Stainless steel
Stainless steel housing	V4A
Sensing face material	Stainless steel, AISI 316
Net weight	47 g
Housing color	Silver
Type of fastening	Through-hole mounting
Standard measuring plate	21 x 21 mm², Fe360

Operation and display

Type of display	LED
Number of LEDs	1 Piece(s)

Environmental data

Ambient temperature, operation	-25 ... 85 °C
Ambient temperature, storage	-25 ... 85 °C

Certifications

Degree of protection	IP 68
	IP 69K
Approvals	c UL US
Test procedure for EMC in accordance with standard	IEC 61000-4-2
	IEC 61000-4-3
	IEC 61000-4-4
Standards applied	IEC 60947-5-2

Correction factors

Aluminum	1
Stainless steel	0.85
Copper	0.8
Brass	1.2
Fe360 steel	1

Classification

Customs tariff number	85365019
ECLASS 5.1.4	27270101
ECLASS 8.0	27270101
ECLASS 9.0	27270101
ECLASS 10.0	27270101
ECLASS 11.0	27270101
ECLASS 12.0	27274001
ECLASS 13.0	27274001
ECLASS 14.0	27274001
ECLASS 15.0	27274001
ETIM 5.0	EC002714
ETIM 6.0	EC002714
ETIM 7.0	EC002714
ETIM 8.0	EC002714
ETIM 9.0	EC002714
ETIM 10.0	EC002714

Dimensioned drawings

All dimensions in millimeters

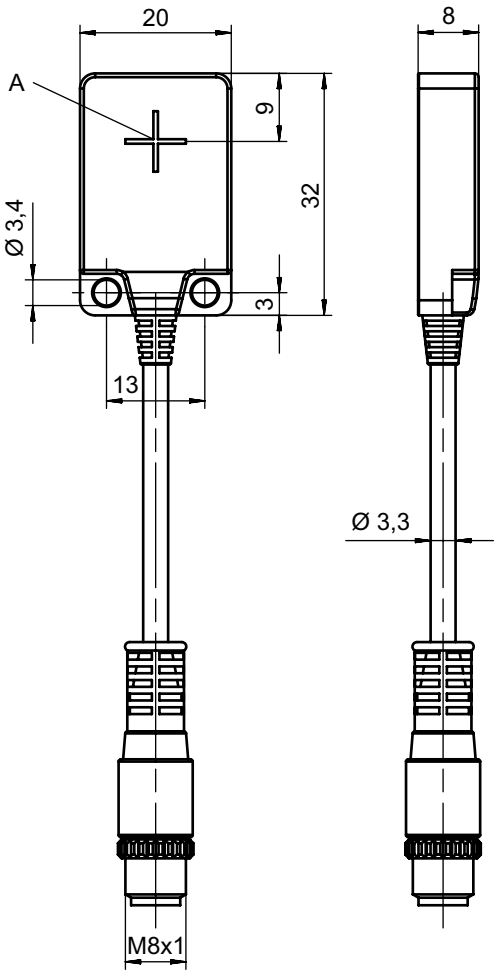

A Active surface
B Yellow LED

Electrical connection

Connection 1

Function	Signal OUT
	Voltage supply
Type of connection	Cable with connector
Cable length	200 mm
Sheathing material	PVC
Cable color	Gray
Number of conductors	3 -wire
Thread size	M8
Type	Male
Material	Metal
No. of pins	3 -pin
Encoding	A-coded
Version	Axial

Electrical connection

Pin	Pin assignment
1	V+
3	GND
4	OUT 1

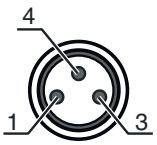

Diagrams

Embedded/flush installation

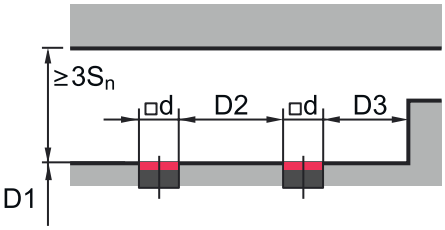

S_n [mm] 7
D1 [mm] 0
D2 [mm] 40
D3 [mm] 11

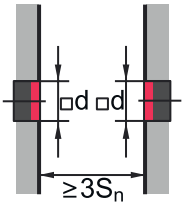

Operation and display

LED	Display	Meaning
1	Yellow, flashing	No function reserve
	Yellow, continuous light	Switching output/switching state

Part number code

Part designation: **ISX YYY ZZ/AAA.BB-CCC-DDD-DDD**

ISX	**Operating principle / construction** IS: inductive switch, standard design ISS: inductive switch, short construction
YYY	**Series** 203: series with Ø 3 mm 204: series with Ø 4 mm 205: series with M5 x 0.5 external thread 206: series with Ø 6.5 mm 208: series with M8 x 1 external thread 212: series with M12 x 1 external thread 218: series with M18 x 1 external thread 230: series with M30 x 1.5 external thread 240: series in cubic design 244: series in cubic design 255: series with 5 x 5 mm² cross section 288: series with 8 x 8 mm² cross section

Part number code

ZZ	**Housing / thread** MM: metal housing (active surface: plastic) / metric thread FM: Full-metal housing (active surface: stainless steel AISI 316L) / metric thread MP: metal housing (active surface: plastic) / smooth (without thread) .2: New version
AAA	**Output current / supply** 4NO: PNP transistor, NO contact 4NC: PNP transistor, NC contact 2NO: NPN transistor, NO contact 2NC: NPN transistor, NC contact 1NO: relay, NO contact / AC/DC 1NC: Relay, NC contact / AC/DC 44: 2 PNP transistor switching outputs, antivalent (NO + NC) 22: 2 NPN transistor switching outputs, antivalent (NO + NC) L: IO-Link interface X: pin not used
BB	**Special equipment** n/a: no special equipment 5F: Food version 5: housing material V2A (1.4305, AISI 303)
CCC	**Measurement range / type of installation** 1E0: typ. range limit 1.0 mm / embedded/flush installation 1E5: typ. range limit 1.5 mm / embedded/flush installation 2E0: typ. range limit 2.0 mm / embedded/flush installation 3E0: typ. range limit 3.0 mm / embedded/flush installation 4E0: typ. range limit 4.0 mm / embedded/flush installation 5E0: typ. range limit 5.0 mm / embedded/flush installation 6E0: typ. range limit 6.0 mm / embedded/flush installation 8E0: typ. range limit 8.0 mm / embedded/flush installation 10E: typ. range limit 10.0 mm / embedded/flush installation 12E: typ. range limit 12.0 mm / embedded/flush installation 15E: typ. range limit 15.0 mm / embedded/flush installation 20E: typ. range limit 20.0 mm / embedded/flush installation 22E: typ. range limit 22.0 mm / embedded/flush installation 2N5: typ. range limit 2.5 mm / non-embedded/non-flush installation 4N0: typ. range limit 4.0 mm / non-embedded/non-flush installation 8N0: typ. range limit 8.0 mm / non-embedded/non-flush installation 10N: typ. range limit 10.0 mm / non-embedded/non-flush installation 12N: typ. range limit 12.0 mm / non-embedded/non-flush installation 14N: typ. range limit 14.0 mm / non-embedded/non-flush installation 15N: typ. range limit 15.0 mm / non-embedded/non-flush installation 20N: typ. range limit 20.0 mm / non-embedded/non-flush installation 22N: typ. range limit 22.0 mm / non-embedded/non-flush installation 25N: typ. range limit 25.0 mm / non-embedded/non-flush installation 40N: typ. range limit 40.0 mm / non-embedded/non-flush installation
DDD	**Electrical connection** n/a: cable, standard length 2000 mm S12: M12 connector, 4-pin, axial 200-S12: cable, length 200 mm with M12 connector, 4-pin, axial 200-S8.3: cable, length 200 mm with M8 connector, 3-pin, axial S8.3: M8 connector, 3-pin, axial 005-S8.3: cable, length 500 mm with M8 connector, 3-pin, axial 050: cable, standard length 5000 mm, 3-wire

Note

- A list with all available device types can be found on the Leuze website at www.leuze.com.

Notes

Observe intended use!

- This product is not a safety sensor and is not intended as personnel protection.
- The product may only be put into operation by competent persons.
- Only use the product in accordance with its intended use.

Notes

For UL applications:

For UL applications, use is only permitted in Class 2 circuits in accordance with the NEC (National Electric Code).

Accessories

Connection technology - Connection cables

	Part no.	Designation	Article	Description
	50130842	KD U-M8-3A-P1-020	Connection cable	Application: Oil and lubricant resistant Connection 1: Connector, M8, Axial, Female, 3 -pin Connector, LED: No Connection 2: Open end Shielded: No Cable length: 2,000 mm Sheathing material: PUR
	50130844	KD U-M8-3A-P1-050	Connection cable	Application: Oil and lubricant resistant Connection 1: Connector, M8, Axial, Female, 3 -pin Connector, LED: No Connection 2: Open end Shielded: No Cable length: 5,000 mm Sheathing material: PUR
	50130837	KD U-M8-3A-V1-020	Connection cable	Application: Chemical resistant Connection 1: Connector, M8, Axial, Female, 3 -pin Connector, LED: No Connection 2: Open end Shielded: No Cable length: 2,000 mm Sheathing material: PVC
	50130860	KD U-M8-3W-V1-020	Connection cable	Application: Chemical resistant Connection 1: Connector, M8, Angled, Female, 3 -pin Connector, LED: No Connection 2: Open end Shielded: No Cable length: 2,000 mm Sheathing material: PVC

Note

A list with all available accessories can be found on the Leuze website in the Download tab of the article detailed page.