Technical data sheet
Stationary 2D-code reader
Part no.: 50141802
DCR 248i FIX-F2-102-I3-G

For Illustration purposes only

Contents

- Technical data
- Dimensioned drawings
- Electrical connection
- Diagrams
- Operation and display
- Part number code
- Notes
- Accessories

Technical data

Basic data

Series	DCR 200i
Chip	CMOS (Global Shutter)

Functions

Software functions	Reading of 1D codes
	Reading of 2D codes

Read data

Code types, readable	2/5 Interleaved
	Aztec
	Codabar
	Code 128
	Code 32
	Code 39
	Code 93
	Data Matrix Code
	EAN 128
	EAN 8/13
	GS1 Databar
	GS1 Databar Omnidirectional
	GS1 Databar QR code
	GS1 Databar Stacked
	PDF417
	Pharma Code
	QR code
	UPC

Optical data

Reading distance	70 ... 360 mm
Light source	LED, Infrared
Transmitted-signal shape	Pulsed
Camera resolution, horizontal	1,280 px
Camera resolution, vertical	960 px
Modulus size	0.19 ... 0.5 mm
Electronic shutter speed	0.068 ... 5 ms
Camera type	Monochrome

Electrical data

Protective circuit	Polarity reversal protection
	Short circuit protected

Performance data

Supply voltage U_B	18 ... 30 V, DC
Average power consumption	8 W

Inputs

Number of digital switching inputs	1 Piece(s)

Switching inputs

Type	Digital switching input
Voltage type	DC

Outputs

Number of digital switching outputs	1 Piece(s)

Switching outputs

Type	Digital switching output
Voltage type	DC
Switching current, max.	100 mA

Switching output 1

Switching element	MOSFET semiconductor
Switching principle	+24 V switching

Inputs/outputs selectable

Number of inputs/outputs selectable	2 Piece(s)
Type	Inputs/outputs selectable
Voltage type, outputs	DC
Voltage type, inputs	DC

Interface

Type	RS 232, RS 422, Ethernet, PROFINET

RS 232

Function	Process
Transmission speed	4,800 ... 115,200 Bd
Data format	Adjustable
Start bit	1
Data bit	8
Stop bit	1
Parity	None
Transmission protocol	<STX><data><CR><LF>
Data encoding	ASCII
	Binary

RS 422

Function	Process
Transmission speed	4,800 ... 115,200 Bd
Data format	Adjustable
Start bit	1
Data bit	7, 8 data bits
Stop bit	1, 2 stop bits
Parity	Adjustable
Data encoding	ASCII
	Binary

Ethernet

Architecture	Client
	Server
Address assignment	DHCP
	Manual address assignment
Transmission speed	10 / 100 Mbit/s
Function	Process
Switch functionality	None
Transmission protocol	TCP/IP , UDP

PROFINET

Function	Process
Conformance class	B
Protocol	PROFINET RT
Transmission speed	100 Mbit/s

Service interface

Type	Ethernet

Ethernet

Function	Service

Connection

Number of connections	2 Piece(s)

Technical data

Connection 1

Function	Data interface
	Signal IN
	Signal OUT
	Voltage supply
Type of connection	Connector
Thread size	M12
Type	Male
Material	Metal
No. of pins	12 -pin
Encoding	A-coded

Connection 2

Function	Configuration interface
	Data interface
Type of connection	Connector
Thread size	M12
Type	Female
Material	Metal
No. of pins	4 -pin
Encoding	D-coded

Mechanical data

Design	Cubic
Dimension (W x H x L)	43 mm x 61 mm x 44 mm
Housing material	Metal
	Plastic
Metal housing	Diecast aluminum
Plastic housing	PC
Lens cover material	Glass
Net weight	120 g
Housing color	Silver
Type of fastening	Mounting thread
	Via optional mounting device

Operation and display

Type of display	LED
Number of LEDs	10 Piece(s)
Type of configuration	Configuration codes
	Teach-in
	Via web browser
Operational controls	Button(s)
Function of the operational control	Adjustment mode
	Auto-setup
	Trigger

Environmental data

Ambient temperature, operation	0 ... 45 °C
Ambient temperature, storage	-20 ... 70 °C
Relative humidity (non-condensing)	90 %

Certifications

Degree of protection	IP 65
Protection class	III
Approvals	c UL US
Test procedure for EMC in accordance with standard	EN 61000-6-2
	EN 61000-6-4
Test procedure for continuous shock in accordance with standard	IEC 60068-2-29, test Eb
Test procedure for vibration in accordance with standard	IEC 60068-2-6, test Fc

Classification

Customs tariff number	84719000
ECLASS 5.1.4	27280103
ECLASS 8.0	27280103
ECLASS 9.0	27280103
ECLASS 10.0	27280103
ECLASS 11.0	27280103
ECLASS 12.0	27280103
ECLASS 13.0	27280103
ECLASS 14.0	27280103
ECLASS 15.0	27280103
ECLASS 16.0	27280103
ETIM 5.0	EC002550
ETIM 6.0	EC002999
ETIM 7.0	EC002999
ETIM 8.0	EC002999
ETIM 9.0	EC002999
ETIM 10.0	EC002999

Dimensioned drawings

All dimensions in millimeters

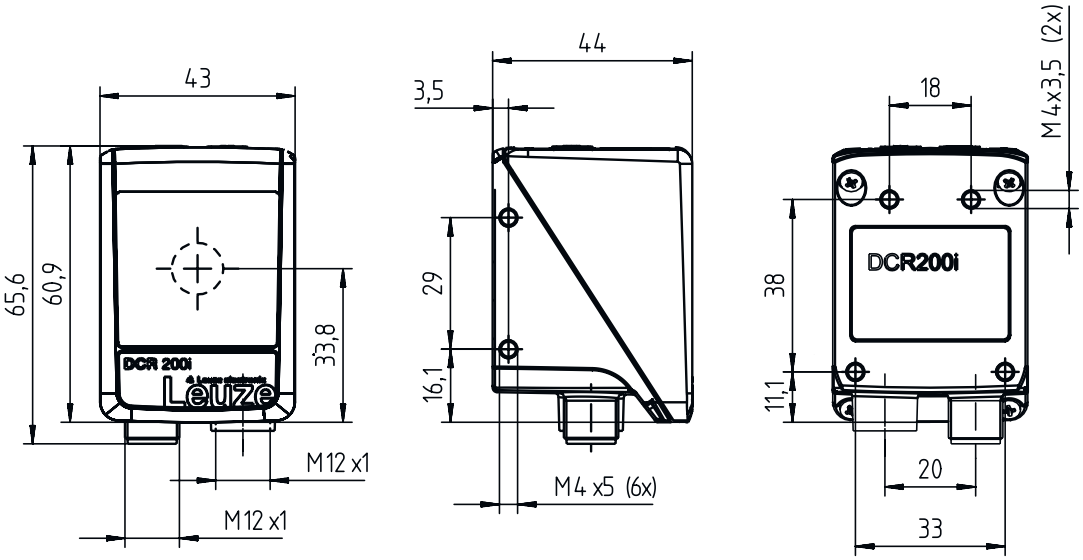

Electrical connection

Connection 1	PWR / SWIO
Function	Data interface
	Signal IN
	Signal OUT
	Voltage supply
Type of connection	Connector
Thread size	M12
Type	Male
Material	Metal
No. of pins	12 -pin
Encoding	A-coded

Pin	Pin assignment
1	VIN
2	GNDIN
3	SWIN 1
4	SWOUT 2
5	FE
6	GND RS 232 / GND RS 422
7	Rx-
8	Tx-
9	RxD/Rx+
10	TxD/Tx+
11	SWIO 3
12	SWIO 4

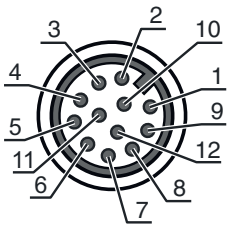

Electrical connection

Connection 2	HOST
Function	Configuration interface
	Data interface
Type of connection	Connector
Thread size	M12
Type	Female
Material	Metal
No. of pins	4 -pin
Encoding	D-coded

Pin	Pin assignment
1	TD+
2	RD+
3	TD-
4	RD-

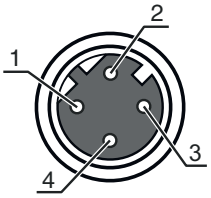

Diagrams

Reading distances

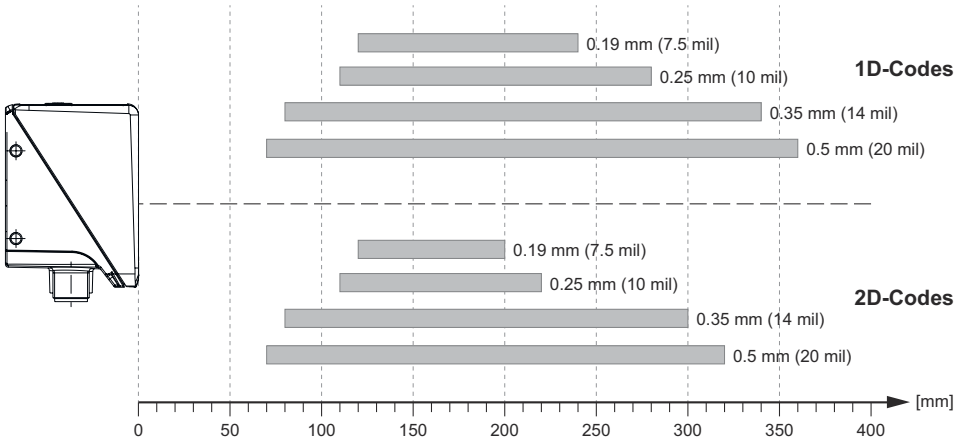

Relationship between camera distance and reading field size

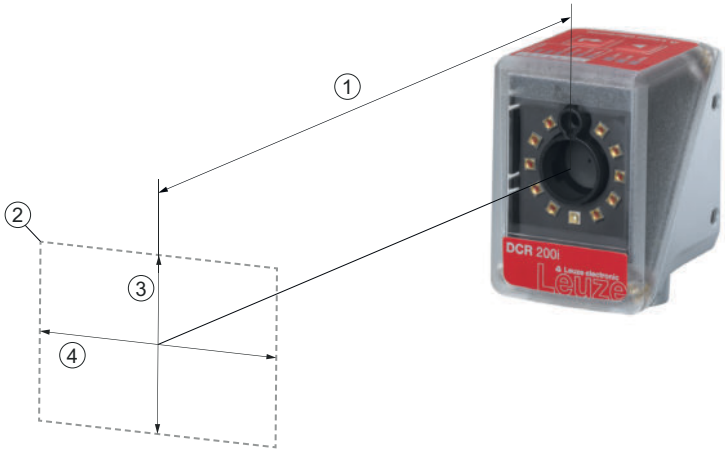

1 Camera distance
2 Reading field
3 Reading field height [mm]
4 Reading field width [mm]

Diagrams

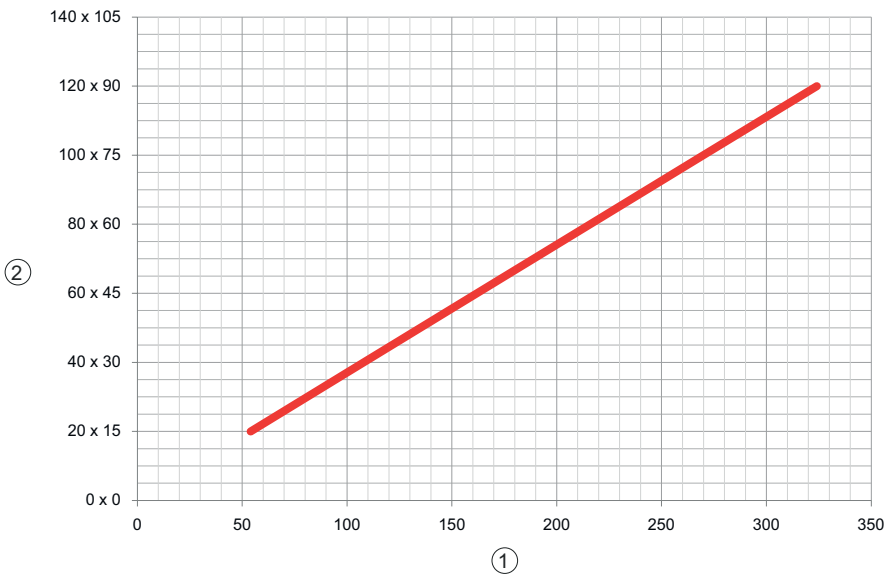

1 Camera distance [mm]
2 Reading field: width x height [mm]

Operation and display

LED		Display	Meaning
1	PWR	Off	No supply voltage
		Green, flashing	Initialization
		Green, continuous light	Operational readiness
		Orange, continuous light	Service operation
		Red, flashing	Device OK, warning set
		Red, continuous light	Device error
2	NET	Off	No supply voltage
		Green, flashing	Initialization
		Green, continuous light	Operational readiness
		Red, flashing	Communication error
		Red, continuous light	Network error
3	LINK	Green, continuous light	Ethernet connection is established
		Yellow, flashing	Data exchange active
4	TRIG	Green, flashing	Trigger and display of the read quality
5	AUTO	Green, flashing	Auto-setup and display of the read quality
6	ADJ	Green, flashing	Alignment mode and display of the read quality
7	TEACH	Green, flashing	Teach-in and display of the read quality
8		Green, flashing	Display of the reading quality
9		Green, flashing	Display of the reading quality
10		Green, flashing (behind lens cover)	Reading successful

Part number code

Part designation: **DCR XXX YYY-Z-AAA-BC-D-EEEE**

DCR	**Operating principle** DCR: Dual Code Reader
XXXX	**Series/interface (integrated fieldbus technology)** 202i: Ethernet TCP/IP, UDP, RS 232/RS 422 248i: PROFINET-IO, Ethernet TCP/IP, UDP, RS 232/RS 422 202iC: Ethernet TCP/IP, UDP, RS 232/RS 422 (IoT / Industry 4.0 connectivity) 248iC: PROFINET-IO, Ethernet TCP/IP, UDP, RS 232/RS 422 (IoT / Industry 4.0 connectivity) 258i: EtherNet/IP
YYY	**Equipment** FIX: Fixed focal length
Z	**Optics** U: Ultra high density (very close) N: High Density (close) M: Medium Density (medium distance) F: Low Density (remote) L: Ultra low density (very large distance)
AAA	**Beam exit** 102: front
B	**Illumination** R: Red light I: infrared light
C	**Resolution range** 3: 1280 x 960 pixels
D	**Protective screen** n/a: plastic G: Glass P: Polarization filter
EEEE	**Special equipment** V: Stainless steel housing F001: NPN inputs/outputs F099: OPC-UA function H: with heating Xxxx: customer-specific model

Note

- A list with all available device types can be found on the Leuze website at www.leuze.com.

Notes

Observe intended use!

- This product is not a safety sensor and is not intended as personnel protection.
- The product may only be put into operation by competent persons.
- Only use the product in accordance with its intended use.

Accessories

Connection technology - Connection cables

	Part no.	Designation	Article	Description
	50130281	KD S-M12-CA-P1-020	Connection cable	Application: Oil and lubricant resistant Connection 1: Connector, M12, Axial, Female, A-coded, 12 -pin Connector, LED: No Connection 2: Open end Shielded: Yes Cable length: 2,000 mm Sheathing material: PUR
	50135073	KS ET-M12-4A-P7-020	Connection cable	Application: Oil and lubricant resistant Suitable for interface: Ethernet Connection 1: Connector, M12, Axial, Male, D-coded, 4 -pin Connector, LED: No Connection 2: Open end Shielded: Yes Cable length: 2,000 mm Sheathing material: PUR

Connection technology - Interconnection cables

	Part no.	Designation	Article	Description
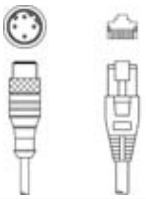	50135080	KSS ET-M12-4A-RJ45-A-P7-020	Interconnection cable	Application: Oil and lubricant resistant Suitable for interface: Ethernet Connection 1: Connector, M12, Axial, Male, D-coded, 4 -pin Connection 2: RJ45 Shielded: Yes Cable length: 2,000 mm Sheathing material: PUR

Mounting technology - Mounting brackets

	Part no.	Designation	Article	Description
	50132151	BT 320M	Mounting bracket	Design of mounting device: Angle, L-shape Fastening, at system: Through-hole mounting Mounting bracket, at device: Screw type Type of mounting device: Rigid Material: Metal

Mounting technology - Rod mounts

	Part no.	Designation	Article	Description
	50132150	BTU 320M-D12	Mounting system	Contains: 4x M4 x 6 screws Design of mounting device: Mounting system Fastening, at system: For 12 mm rod Mounting bracket, at device: Screw type Type of mounting device: Clampable, Adjustable, Turning, 360° Material: Metal

Accessories

Illuminations

	Part no.	Designation	Article	Description
	50144030	IL AL 034/031 IR 110 H	Illumination	Type of article: LED surface illumination Suitable for: DCR 200i, IPS 200i, IPS 400i Special version: Heating Functions: Strobed operation (edge-triggered), no continuous operation Max. (flash time) tB: 4 ms Light source: LED, Infrared Opening angle, max.: 38 ° Housing material: Metal, Plastic Type of fastening: Mounting thread, Via optional mounting device

Services

	Part no.	Designation	Article	Description
	S981014	CS30-S-110	Start-up support	Details: Performed at location of customer's choosing, duration: max. 10 hours. Conditions: Devices and connection cables are already mounted, price not including travel costs and, if applicable, accommodation expenses.
	S981019	CS30-T-110	Product training	Details: Location and content to be agreed upon, duration: max. 10 hours. Conditions: Price not including travel costs and, if applicable, accommodation expenses.

Note	
	✎ A list with all available accessories can be found on the Leuze website in the Download tab of the article detailed page.