Technical data sheet
Rotary encoder
Part no.: 50139585
EI 1058-S08x20C-2500T-M23A

For Illustration purposes only

Contents

- Technical data
- Dimensioned drawings
- Electrical connection

IP 65

Leuze electronic GmbH + Co. KG
In der Braike 1, D-73277 Owen/Germany
info@leuze.com • www.leuze.com
Phone: +49 7021 573-0 • Fax: +49 7021 573-199

We reserve the right to make technical changes

Technical data

Basic data

Series	EI 1xxx
Type	Incremental rotary encoder

Measurement data

Max. operating speed	6,000 r/min
Resolution	2,500 p/r

Electrical data

Protective circuit	Polarity reversal protection
	Short circuit protected

Performance data

Supply voltage U_B	5 ... 28 V, DC
Open-circuit current	0 ... 150 mA

Time behavior

Switching frequency	300,000 Hz

Interface

Type	TTL

Connection

Number of connections	1 Piece(s)

Connection 1

Function	Signal OUT
	Voltage supply
Type of connection	Connector
Thread size	M23
Type	Male
Material	Metal
No. of pins	12 -pin
Plug outlet	Axial

Mechanical data

Housing material	Metal
Metal housing	Aluminum
Flange type	Clamping flange

Shaft

Design	Shaft
Dimension (Ø x L)	8 mm
Dimension (Ø x L)	20 mm
Start-up torque	0.5 N·m
Shaft load - axial	60 N
Shaft load - radial	120 N

Environmental data

Ambient temperature, operation	-40 ... 70 °C
Ambient temperature, storage	-40 ... 70 °C

Certifications

Degree of protection	IP 65
Standards applied	IEC 61000-6-2:2016, IEC 61000-6-4:2016 + A1
Test procedure for vibration in accordance with standard	10g IEC 68-2-6 (10…2000 Hz)

Classification

ECLASS 5.1.4	27270501
ECLASS 8.0	27270501
ECLASS 9.0	27270501
ECLASS 10.0	27270501
ECLASS 11.0	27270501
ECLASS 12.0	27270501
ECLASS 13.0	27270501
ECLASS 14.0	27270501
ECLASS 15.0	27270501
ECLASS 16.0	27270501
ETIM 5.0	EC001486
ETIM 6.0	EC001486
ETIM 7.0	EC001486
ETIM 8.0	EC001486
ETIM 9.0	EC001486
ETIM 10.0	EC001486

Dimensioned drawings

All dimensions in millimeters

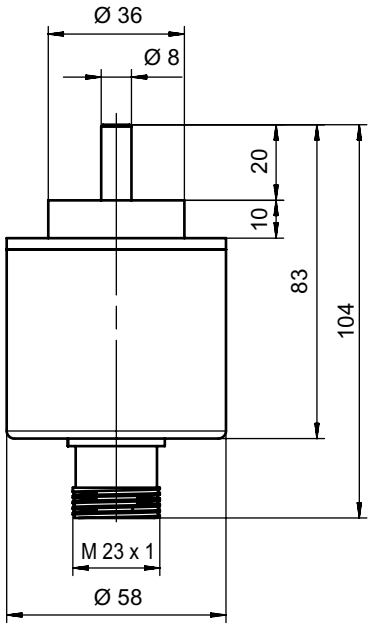

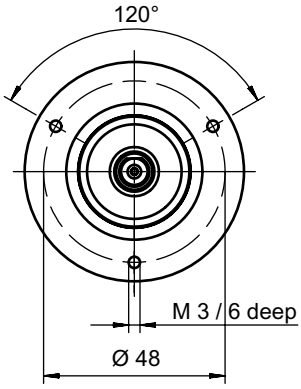

Electrical connection

Connection 1

Function	Signal OUT
	Voltage supply
Type of connection	Connector
Thread size	M23
Type	Male
Material	Metal
No. of pins	12 -pin
Plug outlet	Axial

Pin	Pin assignment
1	B inverted
2	n.c.
3	Z
4	Z inverted
5	A

Electrical connection

Pin	Pin assignment
6	A inverted
7	n.c.
8	B
9	FE/SHIELD
10	GND
11	n.c.
12	V+