Technical data sheet
Throughbeam photoelectric sensor receiver
Part no.: 50147136
LE36.1/2X-200-M12

For Illustration purposes only

Contents

- Technical data
- Dimensioned drawings
- Electrical connection
- Diagrams
- Operation and display
- Suitable transmitters
- Part number code
- Notes
- Further information
- Accessories

Leuze electronic GmbH + Co. KG
In der Braike 1, D-73277 Owen/Germany
info@leuze.com • www.leuze.com
Phone: +49 7021 573-0 • Fax: +49 7021 573-199

We reserve the right to make technical changes

Technical data

Basic data

Series	36
Operating principle	Throughbeam principle
Device type	Receiver

Optical data

Operating range	see transmitter

Electrical data

Protective circuit	Polarity reversal protection
	Short circuit protected
	Transient protection

Performance data

Supply voltage U_B	10 ... 30 V, DC, Incl. residual ripple
Residual ripple	0 ... 15 %, From U_B
Open-circuit current	0 ... 20 mA

Outputs

Number of digital switching outputs	1 Piece(s)

Switching outputs

Type	Digital switching output
Voltage type	DC
Switching current, max.	100 mA
Switching voltage	high: ≥(U_B-2V)
	low: ≤ 2 V

Switching output 1

Assignment	Connection 1, pin 4
Switching element	Transistor, NPN
Switching principle	Light switching

Time behavior

Switching frequency	300 Hz
Response time	1.66 ms
Readiness delay	300 ms

Connection

Number of connections	1 Piece(s)

Connection 1

Function	Signal OUT
	Voltage supply
Type of connection	Cable with connector
Cable length	200 mm
Sheathing material	PUR
Cable color	Black
Number of conductors	4 -wire
Wire cross section	0.2 mm²
Thread size	M12
Type	Male
Material	Plastic
No. of pins	4 -pin
Encoding	A-coded

Mechanical data

Dimension (W x H x L)	20.5 mm x 76.3 mm x 44 mm
Housing material	Plastic
Plastic housing	PC-PBT
Lens cover material	Plastic / PMMA
Net weight	65 g
Housing color	Black
Type of fastening	Through-hole mounting
	Via optional mounting device
Recommended tightening torque for M3 fastening	0.9 N·m
Recommended tightening torque for M4 fastening	1.4 N·m

Operation and display

Type of display	LED
Number of LEDs	2 Piece(s)
Operational controls	270° potentiometer

Environmental data

Ambient temperature, operation	-40 ... 60 °C
Ambient temperature, storage	-40 ... 70 °C

Certifications

Degree of protection	IP 67
Protection class	III
Approvals	c UL US
Standards applied	IEC 60947-5-2

Classification

Customs tariff number	85365019
ECLASS 5.1.4	27270901
ECLASS 8.0	27270901
ECLASS 9.0	27270901
ECLASS 10.0	27270901
ECLASS 11.0	27270901
ECLASS 12.0	27270901
ECLASS 13.0	27270901
ECLASS 14.0	27270901
ECLASS 15.0	27270901
ECLASS 16.0	27270901
ETIM 5.0	EC002716
ETIM 6.0	EC002716
ETIM 7.0	EC002716
ETIM 8.0	EC002716
ETIM 9.0	EC002716
ETIM 10.0	EC002716

Dimensioned drawings

All dimensions in millimeters

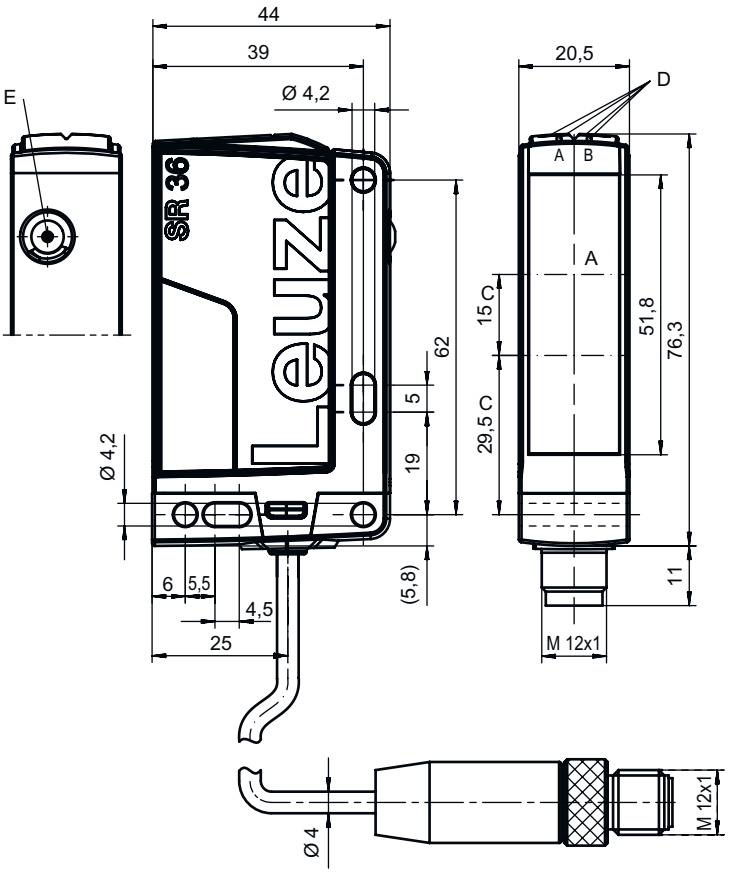

A Receiver
C Optical axis
DA Green LED
DB Yellow LED
E Sensitivity adjustment

Electrical connection

Connection 1

Function	Signal OUT
	Voltage supply
Type of connection	Cable with connector
Cable length	200 mm
Sheathing material	PUR
Cable color	Black
Number of conductors	4 -wire
Wire cross section	0.2 mm²
Thread size	M12
Type	Male
Material	Plastic
No. of pins	4 -pin
Encoding	A-coded

Pin	Pin assignment
1	V+
2	n.c.
3	GND
4	OUT 1

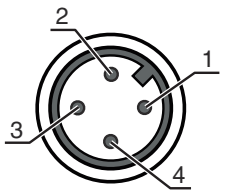

Diagrams

Typ. response behavior

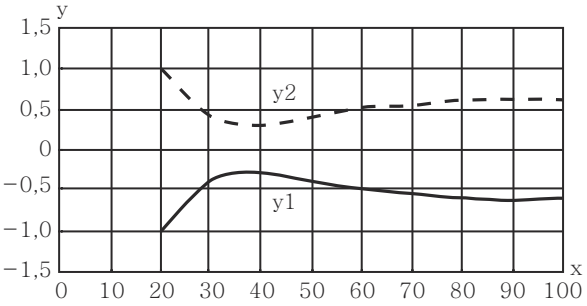

x Distance [m]
y Misalignment [m]

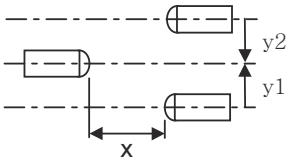

Operation and display

LED	Display	Meaning
1	Green, continuous light	Operational readiness
2	Yellow, continuous light	Light path free
	Yellow, flashing	No function reserve

Suitable transmitters

	Part no.	Designation	Operating range Operating range limit	Description
	50147128	LS36/XX-200-M12	0.5 ... 80 m 0 ... 100 m	Operating range limit: 0 ... 100 m Light source: LED, Red Supply voltage: DC Connection: Cable with connector, 200 mm, M12, Plastic, 4 -wire, 4 -pin

Part number code

Part designation: **AAA36 D.E/FG-K**

AAA36	**Operating principle / construction** HT36: Diffuse reflection sensor with background suppression LS36: Throughbeam photoelectric sensor transmitter LE36: Throughbeam photoelectric sensor receiver PRK36: Retro-reflective photoelectric sensor with polarization filter
D	**Light type** n/a: red light I: infrared light
E	**Equipment** n/a: standard 1: 270° potentiometer D: Depolarizing media

Part number code

FG	**Switching output / Function** 2: NPN transistor output, light switching N: NPN transistor output, dark switching 4: PNP transistor output, light switching P: PNP transistor output, dark switching X: pin not used
K	**Electrical connection** n/a: cable, standard length 2000 mm, 3-wire 200-M8: cable, length 200 mm with M8 connector, 4-pin, axial (plug) 200-M12: cable, length 200 mm with M12 connector, 4-pin, axial (plug) M12: M12 connector, 4-pin (plug)

Note

- A list with all available device types can be found on the Leuze website at www.leuze.com.

Notes

Observe intended use!

- This product is not a safety sensor and is not intended as personnel protection.
- The product may only be put into operation by competent persons.
- Only use the product in accordance with its intended use.

For UL applications:

- For UL applications, use is only permitted in Class 2 circuits in accordance with the NEC (National Electric Code).
- These proximity switches shall be used with UL Listed Cable assemblies rated 30V, 0.5A min, in the field installation, or equivalent (categories: CYJV/CYJV7 or PVVA/PVVA7)

Further information

- Response time: For short decay times, an ohmic load of approx. 5 kOhm is recommended

Accessories

Connection technology - Connection cables

	Part no.	Designation	Article	Description
	50130652	KD U-M12-4A-V1-050	Connection cable	Application: Chemical resistant Connection 1: Connector, M12, Axial, Female, A-coded, 4 -pin Connector, LED: No Connection 2: Open end Shielded: No Cable length: 5,000 mm Sheathing material: PVC

Accessories

	Part no.	Designation	Article	Description
	50130690	KD U-M12-4W-V1-050	Connection cable	Application: Chemical resistant Connection 1: Connector, M12, Angled, Female, A-coded, 4 -pin Connector, LED: No Connection 2: Open end Shielded: No Cable length: 5,000 mm Sheathing material: PVC

Mounting technology - Mounting brackets

	Part no.	Designation	Article	Description
	50105315	BT 46	Mounting device	Design of mounting device: Angle, L-shape Fastening, at system: Through-hole mounting Mounting bracket, at device: Screw type Type of mounting device: Rigid Material: Metal

Mounting technology - Rod mounts

	Part no.	Designation	Article	Description
	50117252	BTU 300M-D12	Mounting system	Contains: 2x M4 x 25 screw, 2x M4 x 20 screw, 4x position washers Design of mounting device: Mounting system Fastening, at system: For 12 mm rod, Sheet-metal mounting Mounting bracket, at device: Screw type, Suited for M4 screws Type of mounting device: Clampable, Adjustable, Turning, 360° Material: Metal

Note	
	✎ A list with all available accessories can be found on the Leuze website in the Download tab of the article detailed page.